MasterLogic-50 Programmable Logic Controller Specification

Overview

Honeywell's new ML50 compact PLC, with its innovative architecture combines power and versatility to help provide performance in a slim, compact and affordable solution. With its high performance and functionality, the new ML50 PLC offer economical automation platform for many industrial control applications. The ML50 family can be used just as I/O, as a standalone PLC or as a distributed control. It offers broad selection of Base modules, Expansion I/O modules, various network interface options and some special modules to enhance control capabilities.

Features

- **Easiness and Convenience**

ML50 series offers convenient user interface with various network diagnosis & monitoring functions and back-up functions.

- Enhanced user interface
- Various monitoring functions
- Network diagnosis & monitoring Battery less back-up

- **Compactness**

ML50 series is very compact but provides powerful functions and performance. Compact & Powerful performance is ML50's steadfast competitiveness.

- **Functionality**

With its powerful and various built-in functions, ML series can provide optimum solution for your automation task.

- Communication: RS232, RS485
- 2-axis positioning functions
- High speed counter
- PID Control
- Various input processing like pulse catch, input filter
- RTC (Real Time Clock) : H type

S type(MLM)

H types(MLC)

- **High performance**

With its high-speed processing and system capability, ML50 series offers utmost efficiency for your applications.

- 83ns/step (H type) and 160ns/step (S type) processing speed and floating-point arithmetic with on-board CPU
- Up to 7 expansion modules for S ty pe and Up to 10 expansion modules for H type, 256 I/O point control for S type and max. 384 I/O point control for H type – PLC system for low-to-mid level applications
- Up to 5 communication ports with built-in-functions and expansion modules

- **Integrated programming & debug environment**

ML50 series offers enhanced programming convenience and various monitoring / diagnosis functions.

- Programming flexibility with max 715 instructions (28 basic instructions, 677 application instructions for S type and 28 basic instructions, 687 application instructions for H type)
- Multi–PLC, Multi-program manage-ment integrated network setting monitoring & diagnosis
- Convenient variable editing
- Compatibility with Microsoft Excel
- Address, Special module & Custom vent monitoring Trend monitor
- Downloading configuration via USB port (H type)

- **Easy Expansion**

With its detachable terminal block and MIL connector, ML50 provides easy and convenient way for wiring and module change. For expansion of PLC system, each expansion module can be easily connected and separated by its direct-insert method.

Specifications (MLM-DR16S, MLM-DN16S, MLM-DN32S)

General

Rated Power Supply Voltage		24V DC					
Inrush Current (when power supply turns on)		70 Apeak or less					
Insulation Resistance		Higher than 10MΩ under DC 500V megger during power terminal and PE terminal					
Withstand Voltage		500V DC for 1min across power terminal and PE terminal					
Noise Resistance (IEC61131-2)		Square wave impulse noise : +/-1,500V Electrostatic discharge : 4kV Rated electromagnetic field noise : 27 to 500MHz, 10V/m EFT/B : 2kV in Main unit, 1kV in expansion module					- IEC61000-4-2 IEC61000-4-3 IEC61000-4-4
Operative Limits	Ambient Temperature	0 to 55°C					
	Relative Humidity	5 to 95%RH (non-condensing)					
	Vibration Resistance (IEC61131-2)	Occasional vibration			Continuous vibration		
		Frequency	Acceleration	Pulse width	Frequency	Acceleration	Pulse width
		10 to 57Hz	-	0.075mm	10 to 57Hz	-	0.035mm
		57 to 150Hz	9.8m/s^2	-	57 to 150Hz	4.9m/s^2	-
		10 times each direction(X, Y and Z)					
	Shock Resistance (IEC61131-2)	Peak Acceleration: 147 m/s^2 (15g) Duration: 11ms Pulse waveform: Half-sine, 3 times each direction per each axis					
Transportation & Storage	Ambient temperature	-20 to +70 °C					
	Relative Humidity	5 to +95% RH (non-condensing)					
Pollution Level		≤ 2 Pollution level indicates the degree to which conductive material is generated in the environment where the equipment is used. Pollution level 2 is the condition that only non-conductive pollution occurred but temporary conductivity may be produced due to condensing.					
Operating Ambience		Free from corrosive gases and excessive dust					
Altitude		Up to 2,000 meters(6,561.68 feets)					
Cooling		Air-cooling					
Base Module (unit: $\frac{mm}{inch}$)		$\frac{30.0}{1.181}(W)\times\frac{90.0}{3.543}(H)\times\frac{60.0}{2.362}(D)$					
Expansion Module (unit: $\frac{mm}{inch}$)		$\frac{30.0}{1.181}(W)\times\frac{90.0}{3.543}(H)\times\frac{60.0}{2.362}(D)$					MLM-DN16S, MLM-DN32S MLM-DR16S
		$\frac{20.0}{0.787}(W)\times\frac{90.0}{3.543}(H)\times\frac{60.0}{2.362}(D)$					MLE-DC _ _ A, MLE-TN _ _ A MLF- _ _ 04A
		$\frac{27.0}{1.063}(W)\times\frac{90.0}{3.543}(H)\times\frac{60.0}{2.362}(D)$					MLE-RY16A

Indicators and Connectors

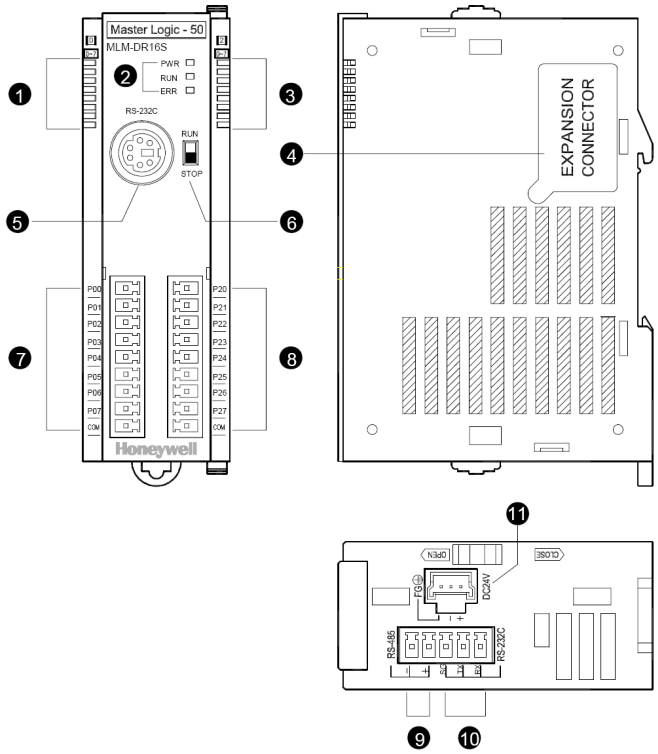

Name		Description	
1	Input LED	Input Indication	Red on/off. Input signal on/off
2	Condition LED	PWR: Power indication	Red on/off. Power on/off
		RUN : RUN indication	Green on/off. PLC RUN/STOP
		ERR : Error indication	Red on/off. PLC error. Red off. PLC normal condition
3	Output LED	Output LED	On/off. Output signal on/off.
4	Expansion Module Connector	Connection of expansion module (I/O, Special function, Communication)	
5	PADT connector	PADT connection	Connector for SoftMaster / SoftMaster-NM connection
6	Model Switch *1	Model setting	Setting RUN/STOP model of PLC
7	Input Connector / Terminal Block	Input wiring connection	
8	Output Connector / Terminal Block	Output wiring connection	
9	RS 485 Connector	Built-in RS-485 terminal connection	
10	RS-232C Connector *2	Built-in RS232C TxD, RxD, GND terminal connection	
11	Power Connector*3	Power supply connection	DC24V Power Supply

*1) In the remote mode, set the mode switch STOP.

*2) GND terminal of RS-232C can be used as GND terminal of RS-485.

*3) Select DC power supply considering current consumption of PLC system.

Specifications				
Model		MLM-DR16S	MLM-DN16S	MLM-DN32S
Performance				
Internal Current Consumption / Output Current		400mA / 1.5A	250mA / 1.5A	280mA / 1.5A
Control Method		Repetitive, cyclic, interrupt, constant scan		
I/O Control Mode		Refresh mode (Batch processing by scan synchronization) Direct mode by instructions		
Programming Language		Ladder diagram, Instruction List		
Number of Instructions		Basic : 28, Applied : 677		
Processing Speed		0.16 μs/Step (for basic instruction)		
Program Capacity		10 kilo-steps		
Max. I/O Points(Main + 7 expansions)		240 points		256 points
Data Memory	P	P0000 – P127F (2,048 points)		
	M	M0000 – M255F (4,096 points)		
	K	K00000 – K2559F (Special area: K2600 – 2559F) (40,960 points)		
	L	L00000 – L1279F (20,480 points)		
	F	F000 – F255F (4,096 points)		
	T	100msec, 10msec, 1msec: T000 – T255 (Changeable by parameter setting)		
	C	C000 – C255		
	S	S00.00 – S127.99		
	D	D0000 – D5119 (5,120 word)		
	U	U00.00 – U07.31 (Analog data refresh area: 256 word)		
	Z	Z000 – Z127 (128 word)		
	N	N0000 – N3935 (3,936 word)		
No. of Program		128		
Operation Mode		RUN, STOP, DEBUG		
Self Diagnostic		Operation delay monitoring, Memory error, I/O error, Power supply failure, etc.		
Program Port		RS-232C (Loader) Remote connection using RS-232C, RS-485		
Data Retention at Power Failure		Latch range setting at Basic parameter		
Built-in Functions		RS-232C/485, High-speed counter, PID control, Pulse catch, Input Filter		
		-	External interrupt, Positioning	
Weight		140g(0.308lb)	100g(0.22lb)	110g(0.243lb)

System Configuration

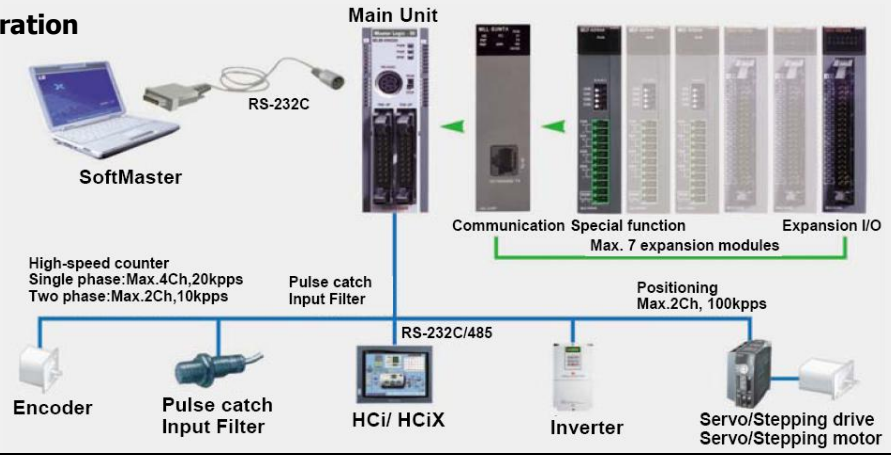

Specifications

DC INPUT

Model		Main Unit		
		MLM-DR16S	MLM-DN16S	MLM-DN32S
Input Points		8	8	16
Insulation Method		Photo-coupler insulation		
Rated Input Voltage / Current		DC24V / 4mA (Contact 00 ~ 03 : 7mA)		
Operation Voltage Range		DC 20.4 to 28.8 V (Ripple rate < 5%)		
ON Voltage / Current		DC19V or more / 3mA or more		
OFF Voltage / Current		DC6V or less / 1mA or less		
Input Resistance		5.6 KΩ (Contact 00~03: 3.3 KΩ)		
Response Time	OFF→ON	1 / 3 / 5 / 10 / 20 / 70 / 100 msec (setting by CPU parameter). Initial value: 3msec		
	ON→OFF			
Insulation Pressure		AC 560Vrms / 3 Cycle (altitude 2000m(6,561.68 fts))		
Insulation Resistance		10 MΩ or more by megger		
COMMON Method		8 points / COM		16 points/COM
Proper Cable Size		Twisted wire 0.3 – 0.75 mm^2 (external diameter ≤ 2.8mm, 0.11inch)		
Operation Indication		Input On, LED On		
External Connection Method		9-Pin Terminal block	20-pin Connecter	20-pin Connecter

Open collector OUTPUT

Model		Main Unit	
		MLM-DN16S	MLM-DN32S
Output Points		8	16
Insulation Method		Photo-coupler insulation	
Rated Load Voltage		DC 12 / 24V	
Load Voltage Range		DC10.2 to 26.4V	
Max. Load Current		0.2A / Point	0.2A/Point,2A/COM
OFF Leakage Current		0.1mA or less	
Max. Voltage Drop(ON)		DC 0.4V	
Surge Absorber		Zener Diode	
Response Time	OFF→ON	1msec or less	
	ON→OFF	1msec or less(Rated Load, Resistive Load)	
Common Method		8 Points / COM	16 Points / COM
External Power Supply	Voltage	DC12/24V ± 10% (Ripple Voltage ≤ 4 Vp-p)	
	Current	25mA or less (at DC24V)	
Operation Indicator		Output ON, LED ON	
External Connection Method		20-pin connecter	

Specifications

Relay OUTPUT

Model		Main Unit
		MLM-DR16S
Output Points		8 points
Insulation Method		Relay insulation
Rated Load Voltage/Current		DC 24V, 2A (Resistive load) / AC220V, 2A (COSψ = 1), 5A/COM
Minimum Load Voltage/Current		DC 5V / 1mA
Maximum Load Voltage/Current		AC250V or DC125V / 2A
OFF Leakage Current		0.1mA (AC250V, 60Hz)
Max. ON/OFF Frequency		3,600 times / Hour
Surge Absorber		None
Service Life	Mechanical	20 million times or more
	Electrical	Rated load voltage/current 100,000 times or more
		AC200V/1.5A, AC240V/1A (COSψ = 0.7) 100,000 times or more
		AC200V/1A, AC240V/0.5A (COSψ = 0.35) 100,000 times or more
		DC24V/1A, DC100V/0.1A (L / R = 7ms) 100,000 times or more
Response Time	OFF→ON	10msec or less
	ON→OFF	12msec or less
Common Method		8 points / 1 COM
Operation Indicator		Output ON, LED ON
External Connection		9-pin terminal block

Input & Output wiring

8-point DC Input	8-point Relay Output
MLM-DR16S	MLM-DR16S
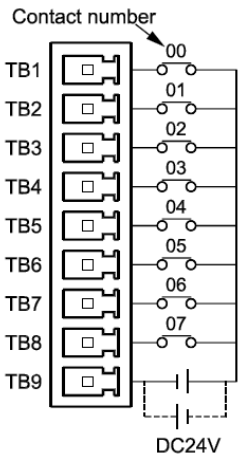	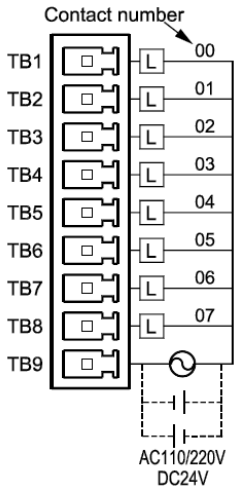

Wiring with Smart Link

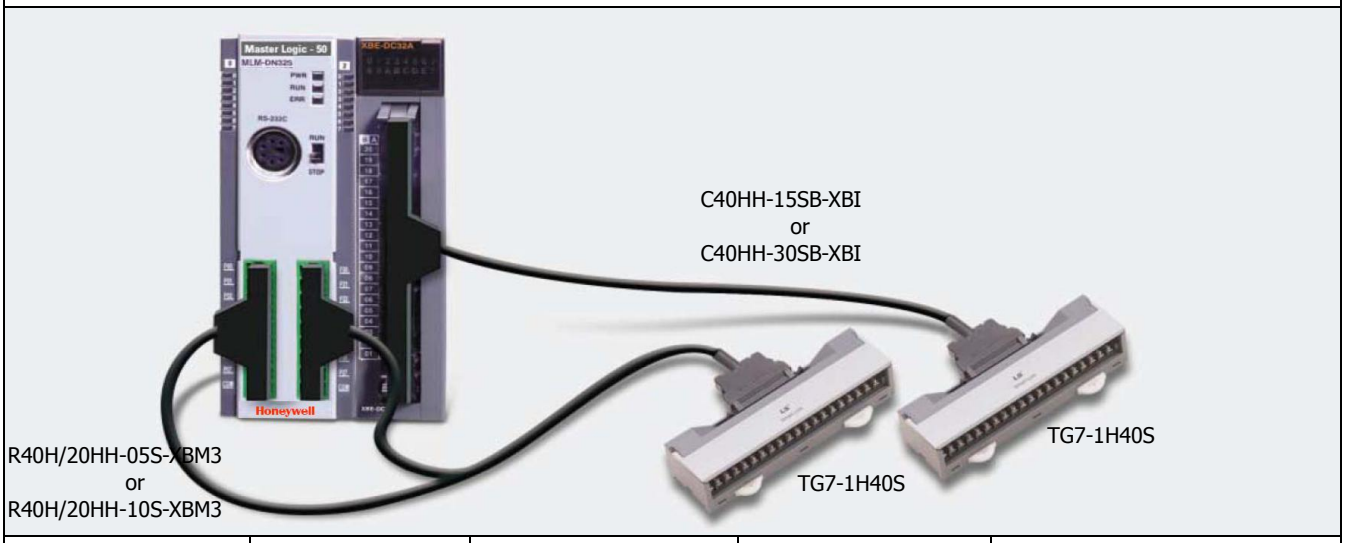

ML50 Module	Smart Link Terminal		Description	Cable number	Cable Specification
Main Unit (20+20 pin)	TG701H40S	40pin	Main I/O wiring	R40H/20HH-10S-XBM3	Soft tube type 1meter(39.4inch)
				R40H/20HH-05S-XBM3	Soft tube type 0.5meter(19.7inch)
Expansion Input and Output(40pin)		40pin	32 point expansion I/O wiring	C40HH-15SB-XBI	Soft tube type 1.5meter(59.1inch)
				C40HH-30SB-XBI	Soft tube type 3meter(118.1inch)

Terminal Layout

20+20pin Terminal Layout(Input)

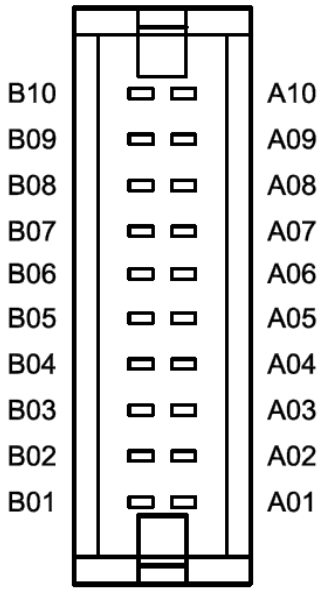

PLC			Smart Link
Pin number	MLM-DN16S	MLM-DN32S	TG7-1H40S
B10	00	00	A1
B09	01	01	B1
B08	02	02	A2
B07	03	03	B2
B06	04	04	A3
B05	05	05	B3
B04	06	06	A4
B03	07	07	B4
B02	COM0	COM0	A5
B01	COM0	COM0	B5
A10	NC	08	A6
A09	NC	09	B6
A08	NC	0A	A7
A07	NC	0B	B7
A06	NC	0C	A8
A05	NC	0D	B8
A04	NC	0E	A9
A03	NC	0F	B9
A02	NC	COM1	A10
A01	NC	COM1	B10

20+20pin Terminal Layout(Output)

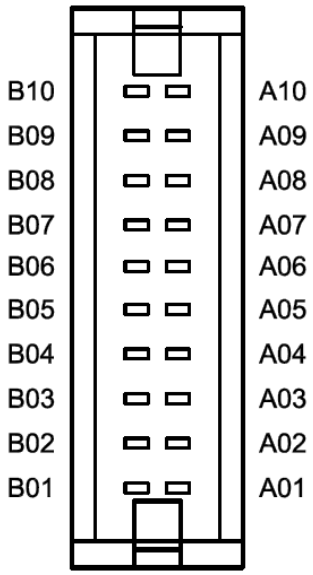

PLC			Smart Link
Pin number	MLM-DN16S	MLM-DN32S	TG7-1H40S
B10	20	20	A11
B09	21	21	B11
B08	22	22	A12
B07	23	23	B12
B06	24	24	A13
B05	25	25	B13
B04	26	26	A14
B03	27	27	B14
B02	+12 / 24V	+12 / 24V	A15
B01	+12 / 24V	+12 / 24V	B15
A10	NC	28	A16
A09	NC	29	B16
A08	NC	2A	A17
A07	NC	2B	B17
A06	NC	2C	A18
A05	NC	2D	B18
A04	NC	2E	A19
A03	NC	2F	B19
A02	COM0	COM0	A20
A01	COM0	COM0	B20

40+40pin Terminal Layout(Output)

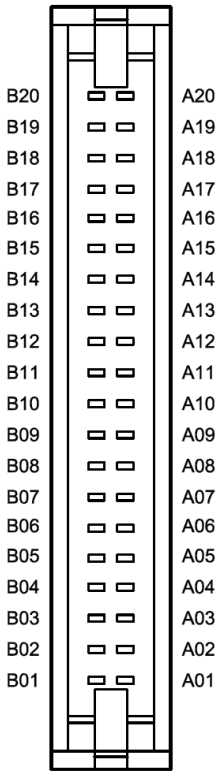

PLC						Smart Link	
Pin number		MLE-DC32A(Note1)		MLE-TN32A(Note1)		TG7-1H40S (I/O Link terminal)	
B20	A20	00(20)	10(30)	00(20)	10(30)	A1	A11
B19	A19	01(21)	11(31)	01(21)	11(31)	B1	B11
B18	A18	02(22)	12(32)	02(22)	12(32)	A2	A12
B17	A17	03(23)	13(33)	03(23)	13(33)	B2	B12
B16	A16	04(24)	14(34)	04(24)	14(34)	A3	A13
B15	A15	05(25)	15(35)	05(25)	15(35)	B3	B13
B14	A14	06(26)	16(36)	06(26)	16(36)	A4	A14
B13	A13	07(27)	17(37)	07(27)	17(37)	B4	B14
B12	A12	08(28)	18(38)	08(28)	18(38)	A5	A15
B11	A11	09(29)	19(39)	09(29)	19(39)	B5	B15
B10	A10	0A(2A)	1A(3A)	0A(2A)	1A(3A)	A6	A16
B09	A09	0B(2B)	1B(3B)	0B(2B)	1B(3B)	B6	B16
B08	A08	0C(2C)	1C(3C)	0C(2C)	1C(3C)	A7	A17
B07	A07	0D(2D)	1D(3D)	0D(2D)	1D(3D)	B7	B17
B06	A06	0E(2E)	1E(3E)	0E(2E)	1E(3E)	A8	A18
B05	A05	0F(2F)	1F(3F)	0F(2F)	1F(3F)	B8	B18
B04	A04	NC	NC	NC	NC	A9	A19
B03	A03	NC	NC	NC	NC	B9	B19
B02	A02	COM	COM	DC12/24V	COM	A10	A20
B01	A01					B10	B20

*NOTE1) The number inside () is the address of 64point I/O module.

Wiring Diagram	
Model	Wiring Diagram
MLM-DN16S Wiring Diagram	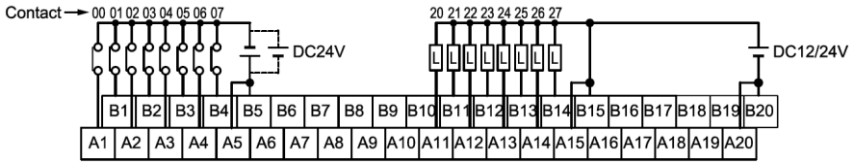
MLM-DN32S Wiring Diagram	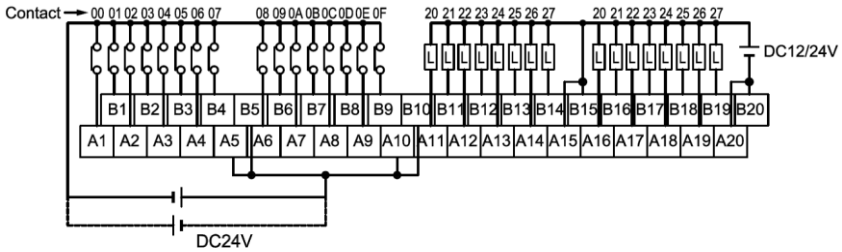
MLE-DC32A Input Wiring Diagram	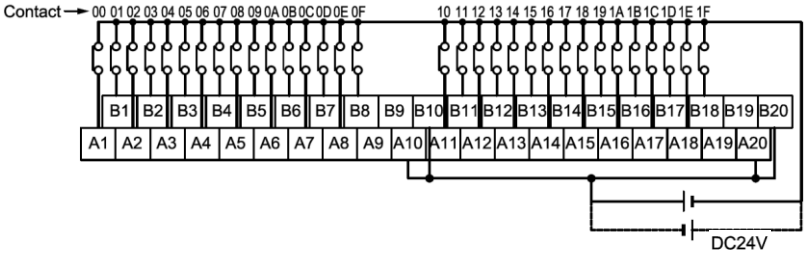
MLE-TN32A Output Wiring Diagram (TG7-1H40S)	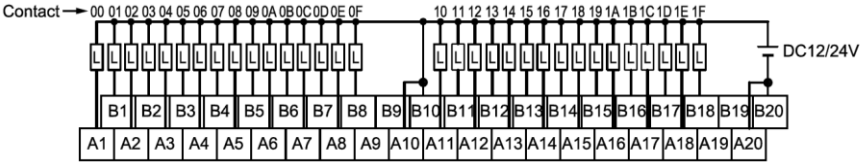

Specifications (MLC-DR32H, MLC-DN32H, MLC-DR64H, MLC-DN64H) (MLC-DR32H/DC, MLC-DN32H/DC, MLC-DR64H/DC, MLC-DN64H/DC)

General

Rated Power Supply Voltage		100 ~ 240V AC or 24Vdc					
Inrush Current (when power supply turns on)		50 Apeak or less					
Insulation Resistance		Higher than 10MΩ under DC 500V megger during power terminal and PE terminal					
Withstand Voltage		1500V AC 50/60Hz for 1min across power terminal and PE terminal					
Noise Resistance (IEC61131-2)		Square wave impulse noise : +/-1,500V Electrostatic discharge : 4kV (contact discharge) Rated electromagnetic field noise : 80 to 1,000MHz, 10V/m EFT/B : 2kV in Main unit, 1kV in expansion module					- IEC61000-4-2 IEC61000-4-3 IEC61000-4-4
Operative Limits	Ambient Temperature	0 to 55°C					
	Relative Humidity	5 to 95%RH (non-condensing)					
	Vibration Resistance (IEC61131-2)	Occasional vibration			Continuous vibration		
		Frequency	Acceleration	Pulse width	Frequency	Acceleration	Pulse width
		10 to 57Hz	-	0.075mm	10 to 57Hz	-	0.035mm
		57 to 150Hz	9.8m/s^2	-	57 to 150Hz	4.9m/s^2	-
		10 times each direction(X, Y and Z)					
	Shock Resistance (IEC61131-2)	Peak Acceleration: 147 m/s^2 (15g) Duration: 11ms Pulse waveform: Half-sine, 3 times each direction per each axis					
Transportation & Storage	Ambient temperature	-25 to +70 °C					
	Relative Humidity	5 to +95% RH (non-condensing)					
Pollution Level		≤ 2 Pollution level indicates the degree to which conductive material is generated in the environment where the equipment is used. Pollution level 2 is the condition that only non-conductive pollution occurred but temporary conductivity may be produced due to condensing.					
Operating Ambience		Free from corrosive gases and excessive dust					
Altitude		Up to 2,000 meters(6,561.68 feets)					
Cooling		Air-cooling					
Base Module (unit: $\frac{mm}{inch}$)		$\frac{114.0}{4.488}(W)\times\frac{90.0}{3.543}(H)\times\frac{64.0}{2.520}(D)$					MLC-DN32H, MLC-DR32H
		$\frac{180.0}{7.087}(W)\times\frac{90.0}{3.543}(H)\times\frac{64.0}{2.520}(D)$					MLC-DN64H, MLC-DR64H
Expansion Module (unit: $\frac{mm}{inch}$)		$\frac{30.0}{1.181}(W)\times\frac{90.0}{3.543}(H)\times\frac{60.0}{2.362}(D)$					MLM-DN16S, MLM-DN32S MLM-DR16S
		$\frac{20.0}{0.787}(W)\times\frac{90.0}{3.543}(H)\times\frac{60.0}{2.362}(D)$					MLE-DC _ _ A, MLE-TN _ _ A MLF- _ _ 04A
		$\frac{27.0}{1.063}(W)\times\frac{90.0}{3.543}(H)\times\frac{60.0}{2.362}(D)$					MLE-RY16A

Indicators and Connectors

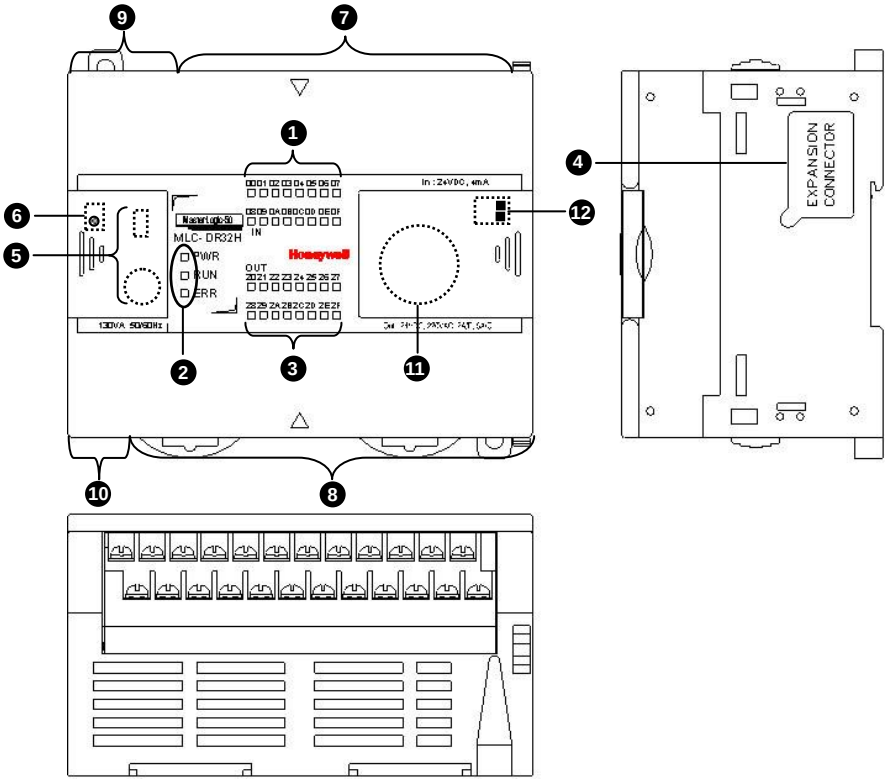

Name		Description	
1	Input LED	Input Indication	Red on/off. Input signal on/off
2	Condition LED	PWR: Power indication	Red on/off. Power on/off
		RUN : RUN indication	Green on/off. PLC RUN/STOP
		ERR : Error indication	Red on and off. PLC error. Red off. PLC normal condition
3	Output LED	Output LED	On/off. Output signal on/off.
4	Expansion Module Connector	Connection of expansion module (I/O, Special function, Communication)	
5	PADT connector	PADT connection	Connector for SoftMaster / SoftMaster-NM connection USB (USB 1.1 supported) 1 Ch., RS-232C 1 Ch.
6	Model Switch *1	Model setting	Setting RUN/STOP model of PLC
7	Input Terminal Block	Input wiring connection	
8	Output Terminal Block	Output wiring connection	
9	Built-in Communication Terminal Block	Built-in RS-485 terminal connection	
		Built-in RS232C TxD, RxD, SG terminal connection	
10	Power Terminal Block*3	Power supply connection	AC 100 ~ 240 V
11	Battery Holder	Battery (3V) holder for data back-up	
12	O/S Mode Dip Switch	Dip Switch for setting operation or O/S download mode	

*1) In the remote mode, set the mode switch STOP.

*2) SG terminal of RS-232C can be used as SG terminal of RS-485.

Honeywell

Specifications						
Model			MLC-DR32H	MLC-DN32H	MLC-DR64H	MLC-DN64H
Performance						
Internal Current Consumption / Output Current			660mA / 3A	260mA / 2A	1040mA / 3A	330mA / 2A
Control Method			Repetitive, cyclic, interrupt, constant scan			
I/O Control Mode			Refresh mode (Batch processing by scan synchronization) Direct mode by instructions			
Programming Language			Ladder diagram, Instruction List			
Number of Instructions			Basic : 28, Applied : 687			
Processing Speed			83 ns/Step (for basic instruction)			
Program Capacity			15 kilo-steps			
Max. I/O Points			352 points(Main + 10 expansions)		384 points (Main + 10 expansions)	
Data Memory	Symbolic Var.	P	P0000 ~ P1023F (16,384 points)			
	Input Var.	M	M0000 ~ M1023F (16,384 points)			
	Output Var.	K	K00000 ~ K4095F (Special area: K2600~3339F) (65,536 points)			
	Direct Var.	L	L00000 ~ L2047F (32,768 points)			
		F	F000 ~ F1023F (16,384 points)			
		T	100ms, 10ms, 1ms: T000 ~ T1023 (Changeable by Parameter setting)			
	Flag Var.	C	C000 ~ C1023			
		S	S00.00 ~ S127.99			
		D	D0000 ~ D10,239 (10,240 word)			
		U	U00.00 ~ U0A.31 (Analog data refresh area: 352 word)			
		Z	Z000 ~ Z127 (128 word)			
	Direct Var.	N	N0000 ~ N5119 (5120 word)			
	Flash Area	R	R0000 ~ R10239			
No. of Program			128			
Operation Mode			RUN, STOP, DEBUG			
Self Diagnostic			Operation delay monitoring, memory error, I/O error, battery error, power error, etc.			
Program Port			USB (Rev 1.1), RS-232C (6 pin)			
Data Retention at Power Failure			Latch range setting at Basic parameter			
Built-in Functions			RS-232C/485, High-speed counter, PID control, Pulse catch, Input Filter, External interrupt,			
			-	Positioning	-	Positioning
Weight			600g (1.32lb)	500g (1.10lb)	900g (1.98lb)	800g (1.76lb)

System Configuration

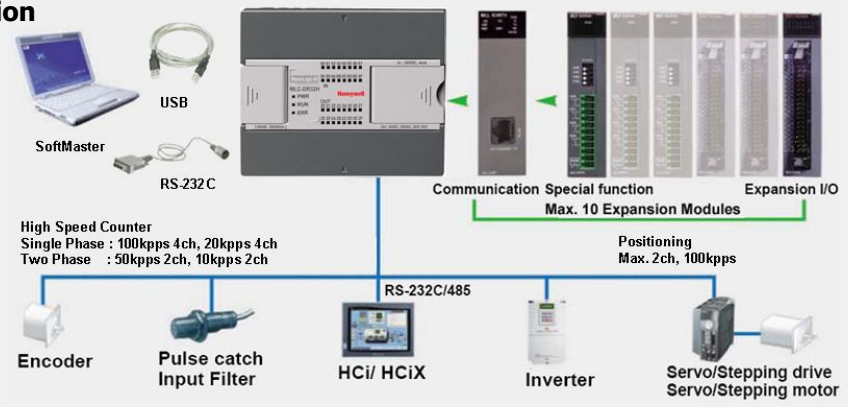

Specifications

DC INPUT

Model		Main Unit			
		MLC-DR32H	MLC-DN32H	MLC-DR64H	MLC-DN64H
Input Points		16		32	
Insulation Method		Photo-coupler insulation			
Rated Input Voltage / Current		DC24V / 4mA (Contact 00 ~ 07 : 7mA)			
Operation Voltage Range		DC 20.4 to 28.8 V (Ripple rate < 5%)			
ON Voltage / Current		DC19V or more / 3mA or more			
OFF Voltage / Current		DC6V or less / 1mA or less			
Input Resistance		5.6 KΩ (P00~P07: 2.7 KΩ)			
Response Time	OFF→ON	1 / 3 / 5 / 10 / 20 / 70 / 100 msec (setting by CPU parameter). Initial value: 3msec			
	ON→OFF				
Insulation Pressure		AC 560Vrms / 3 Cycle (altitude 2000m(6,561.68 fts))			
Insulation Resistance		10 MΩ or more by megger			
COMMON Method		16 points / COM			
Proper Cable Size		Twisted wire 0.3 – 0.75 mm^2 (external diameter ≤ 2.8mm, 0.11inch)			
Operation Indication		Input On, LED On			
External Connection Method		24 points connecting connector (M3 X 6 screw)		42 point connecting connector (M3 X 6 screw)	

Open collector OUTPUT

Model		Main Unit	
		MLC-DN32H	MLC-DN64H
Output Points		16	32
Insulation Method		Photo-coupler insulation	
Rated Load Voltage		DC 12 / 24V	
Load Voltage Range		DC10.2 to 26.4V	
Max. Load Current		0.5A / 1point (P20~23:0.1A/point)	
OFF Leakage Current		0.1mA or less	
Max. Inrush Current		4A / 10msec or less	
Max. Voltage Drop(ON)		DC 0.4V or less	
Surge Absorber		Zener Diode	
Response Time	OFF→ON	1msec or less	
	ON→OFF	1msec or less(Rated Load, Resistive Load)	
Common Method		4 Points / COM	4 Points / COM (COM0~COM3) 8 Points / COM (COM4~COM5)
External Power Supply	Voltage	DC12/24V ± 10% (Ripple Voltage ≤ 4 Vp-p)	
	Current	25mA or less (at DC24V)	
Operation Indicator		Output ON, LED ON	
External Connection Method		24 points connecting connector (M3 X 6 screw)	42 point connecting connector (M3 X 6 screw)

Specifications

Relay OUTPUT

Model		Main Unit	
		MLC-DR32H	MLC-DR64H
Output Points		16	32
Insulation Method		Relay insulation	
Rated Load Voltage/Current		DC 24V, 2A (Resistive load) / AC220V, 2A (COSψ = 1), 5A/COM	
Minimum Load Voltage/Current		DC 5V / 1mA	
Maximum Load Voltage/Current		AC250V or DC125V / 2A	
OFF Leakage Current		0.1mA (AC220V, 60Hz)	
Max. ON/OFF Frequency		3,600 times / Hour	
Surge Absorber		None	
Service Life	Mechanical	20 million times or more	
	Electrical	Rated load voltage/current 100,000 times or more	
		AC200V/1.5A, AC240V/1A (COSψ = 0.7) 100,000 times or more	
		AC200V/1A, AC240V/0.5A (COSψ = 0.35) 100,000 times or more	
		DC24V/1A, DC100V/0.1A (L / R = 7ms) 100,000 times or more	
Response Time	OFF→ON	10msec or less	
	ON→OFF	12msec or less	
Common Method		4 points / COM	4 point / COM (COM0~COM3) 8 point / COM (COM4~COM5)
Operation Indicator		Output ON, LED ON	
External Connection Method		24 point connecting connector (M3 X 6 screw)	42 point connecting connector (M3 X 6 screw)

Input & Output wiring

Input wiring (MLC-DR32H / MLC-DN32H)

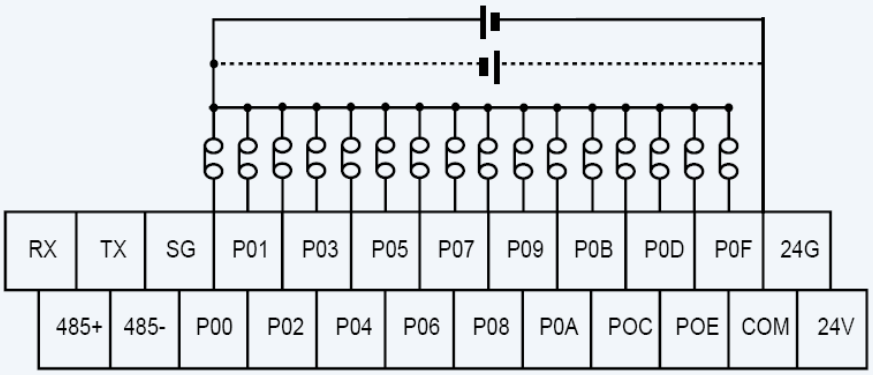

Input wiring (MLC-DR64H / MLC-DN32H)

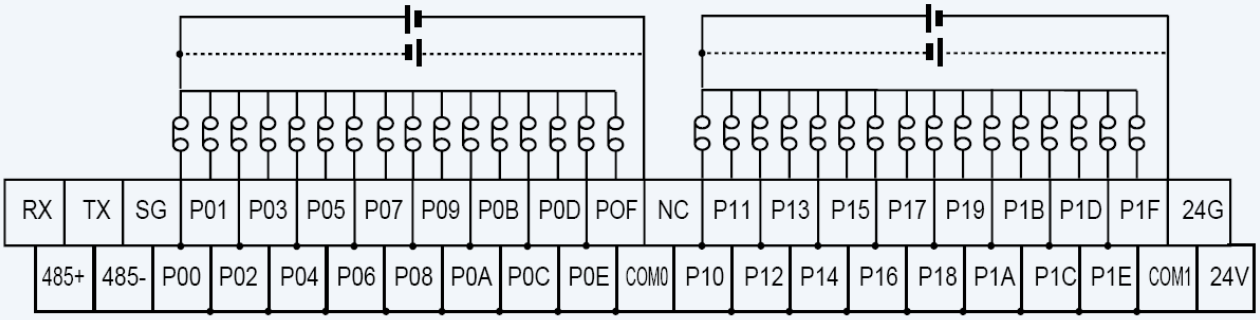

Relay Output wiring (MLC-DR32H)

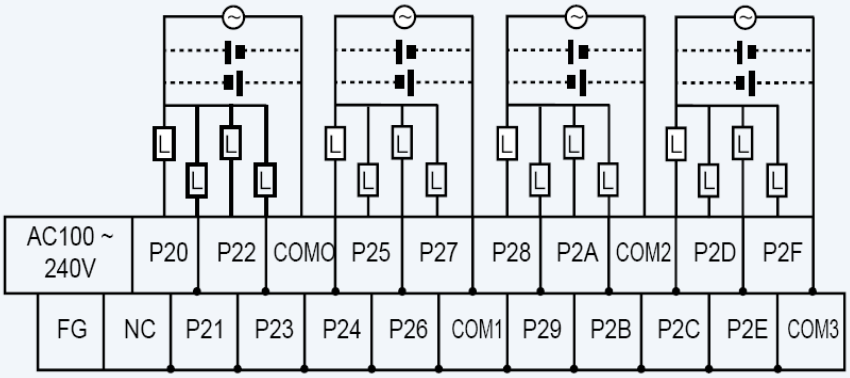

Open Collector wiring (MLC-DN32H)

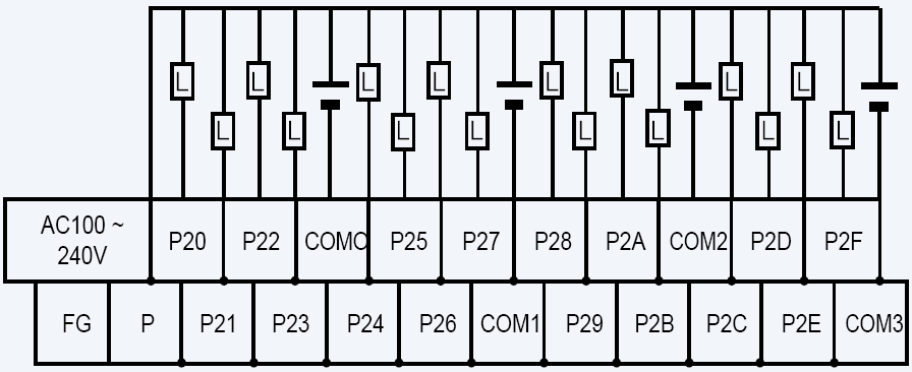

Relay Output wiring (MLC-DR64H)

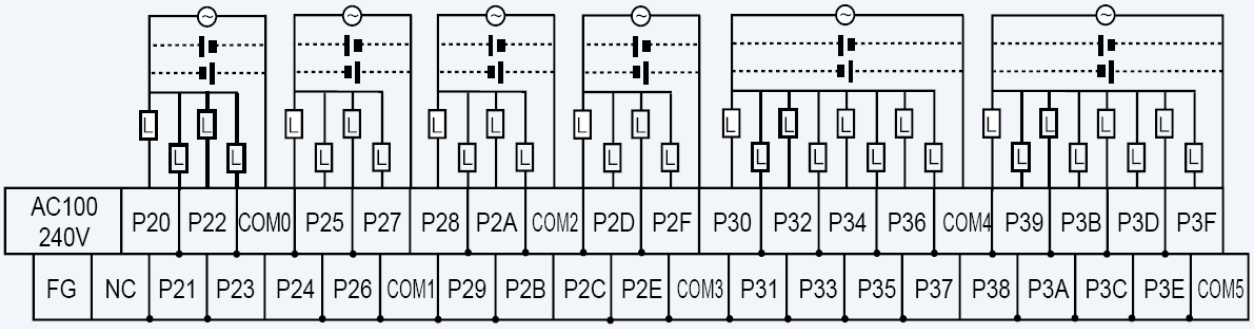

Open Collector wiring (MLC-DN64H)

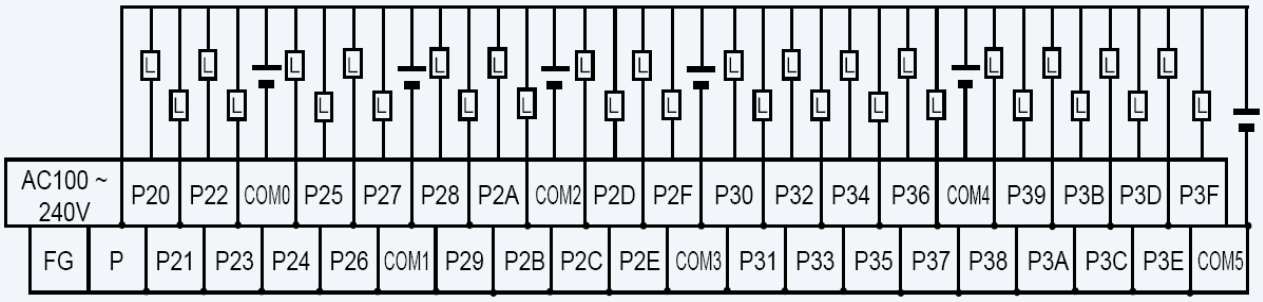

Specifications

High Speed Counter

Model	**CPU type**	
	S type (MLM)	H type (MLC)
Function		
Pulse Input Mode	Incremental / Decremental counter by program when input is 1-phase pulse.	
	Incremental / Decremental counter by B-axis input when input is 1-phase pulse.	
	Incremental / Decremental counter (4 multiplication) by phase difference when input 2-phase pulse.	
	Incremental counter by CW/CCW input when input 2-phase pulse.	
Counter Mode	Linear counter (If 32 bit range exceeded, Carry/Borrow occurs)	
	Ring counter: Counter rotating between value in 0 ~ (Ring counter setting value -1)	
Present Value Preset	Changes present value of counter to optional value – Internal preset / External preset	
Comparison Output	Sets output contact when counter value corresponds with comparison output condition. Comparison output condition : >, ≥, =, ≤, <, inclusion, exclusion	
No. of Rotation	Outputs the rotation number of input pulse per unit time.	
Performance		
No. of Points	1-phase 4 points, 2-phase 2 points	1-phase 8 points, 2-phase 4 points
Input Points	A Phase, B Phase, Preset input	
Counting Range	Linear counter: - 2,147,483,648 ~ 2,147,483,647 (Binary 32 Bit)	
	Ring Counter : 0~2,147,483,647	Ring Counter : -2,147,483,648~2,147,483,647
Counting Speed	1-phase 20kpps 4ch 2-phase 10kpps 2ch	1-phase 100kpps 4ch, 20kpps 4ch 2-phase 50kpps 2ch, 8kpps 2ch
Incremental Functions	Ring counter, preset, Rotation number per unit time, Comparison output, Latch counter	

Electrical

Input Voltage	DC 24V (20.4V ~ 28.8V)
Input Current	4mA
On Guaranteed Voltage (Minimum)	DC 20.4 V
Off Guaranteed Voltage (Maximum)	DC 6V

High-speed Counter Terminal

High speed counter accurately counts the number of high speed pulse generated from encoder or pulse generator.

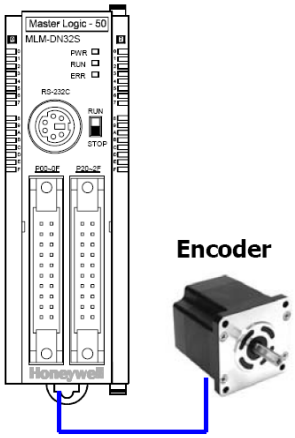

High speed Counter

One phase : Max. 4Ch, 20kpps

Two phase : Max. 2Ch, 10kpps

Terminal Number	1-Phase		2-Phase	
	Signal name	Description	Signal name	Description
P000	Ch0 counter input	Counter input	Ch0 A-axis input	A-axis input
P001	Ch1 counter input	Counter input	Ch0 B-axis input	B-axis input
P002	Ch2 counter input	Counter input	Ch2 A-axis input	A-axis input
P003	Ch3 counter input	Counter input	Ch2 B-axis input	B-axis input
P004	Ch0 preset 24V	Preset input	Ch0 preset 24V	Preset input
P005	Ch1 preset 24V	Preset input	-	-
P006	Ch2 preset 24V	Preset input	Ch2 preset 24V	Preset input
P007	Ch3 preset 24V	Preset input	-	-
COM0	Input COMMON	COMMON	Input COMMON	COMMON

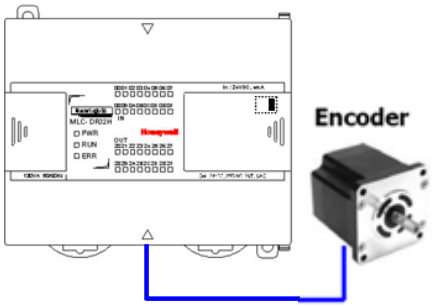

High-speed counter

One phase: 100kpps 4ch, 20kpps 4ch

Two phase: 50kpps 2ch, 10kpps 2ch

Terminal Number	1-Phase		2-Phase	
	Signal name	Description	Signal name	Description
P000	Ch0 counter input	Counter input	Ch0 A-axis input	A-axis input
P001	Ch1 counter input	Counter input	Ch0 B-axis input	B-axis input
P002	Ch2 counter input	Counter input	Ch2 A-axis input	A-axis input
P003	Ch3 counter input	Counter input	Ch2 B-axis input	B-axis input
P004	Ch4 counter input	Counter input	Ch4 A-axis input	A-axis input
P005	Ch5 counter input	Counter input	Ch4 B-axis input	B-axis input
P006	Ch6 counter input	Counter input	Ch6 A-axis input	A-axis input
P007	Ch7 counter input	Counter input	Ch6 B-axis input	B-axis input
P008	Ch0 preset 24V	Preset input	Ch0 preset 24V	Preset input
P009	Ch1 preset 24V	Preset input	-	-
P00A	Ch2 preset 24V	Preset input	Ch2 preset 24V	Preset input
P00B	Ch3 preset 24V	Preset input	-	-
P00C	Ch4 preset 24V	Preset input	Ch4 preset 24V	Preset input
P00D	Ch5 preset 24V	Preset input	-	-
P00E	Ch6 preset 24V	Preset input	Ch6 preset 24V	Preset input
P00F	Ch7 preset 24V	Preset input	-	-
COM0	Input COMMON	COMMON	Input COMMON	COMMON

Encoder Wiring

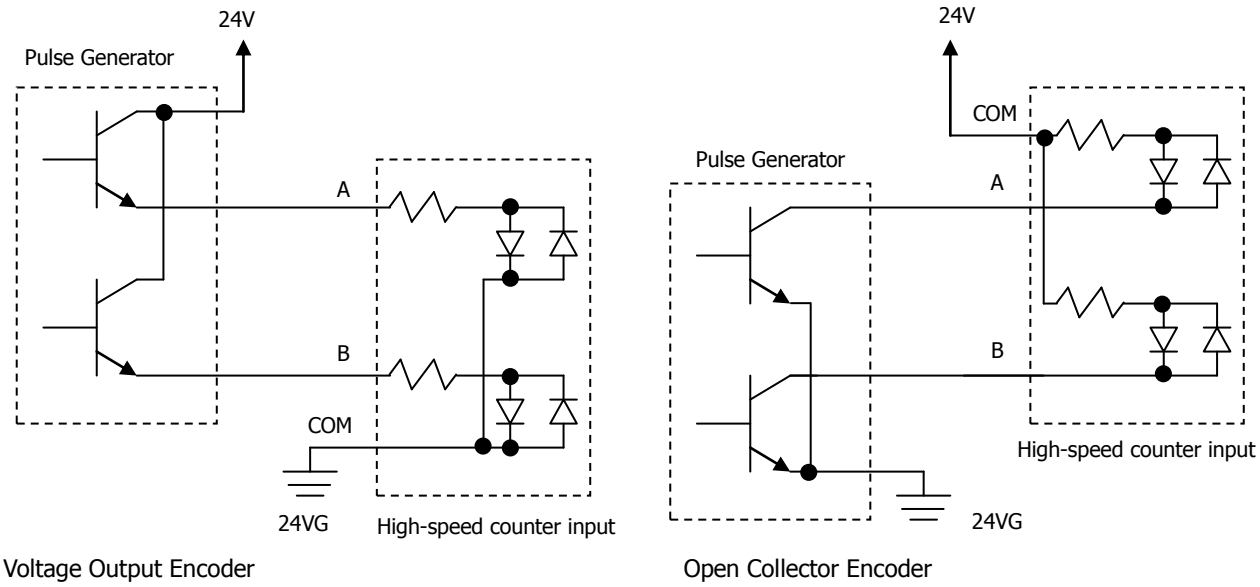

Operation Setting Address of High-speed Counter ("S" type)

ITEM	Device Range for each Channel				Remark
	CH1	CH2	CH3	CH4	
Counter Enable	K2600	K2700	K2800	K2900	Bit
Counter Internal Preset Assignment	K2601	K2701	K2801	K2901	Bit
Counter External Preset Enable	K2602	K2702	K2802	K2902	Bit
Substraction Counter Assignment	K2603	K2703	K2803	K2903	Bit
Comparison Output Enable	K2604	K2704	K2804	K2904	Bit
Rotation Number per Unit Time Enable	K2605	K2705	K2805	K2905	Bit
Latch Counter Enable	K2606	K2706	K2806	K2906	Bit
Carry Signal(Bit)	K2610	K2710	K2810	K2910	Bit
Borow Signal(Bit)	K2611	K2711	K2811	K2911	Bit
Comparison Output Signal	K2612	K2712	K2812	K2912	Bit

Operation Setting Address of High-speed Counter ("H" type)

ITEM	Device Range for each Channel								Remark
	CH1	CH2	CH3	CH4	CH5	CH6	CH7	CH8	
Counter Enable	K2600	K2700	K2800	K2900	K21800	K21900	K22000	K22100	Bit
Counter Internal Preset Assignment	K2601	K2701	K2801	K2901	K21801	K21901	K22001	K22101	Bit
Counter External Preset Enable	K2602	K2702	K2802	K2902	K21802	K21902	K22002	K22102	Bit
Substraction Counter Assignment	K2603	K2703	K2803	K2903	K21803	K21903	K22003	K22103	Bit
Comparison Output 0 Enable	K2604	K2704	K2804	K2904	K21804	K21904	K22004	K22104	Bit
Rotation Number per Unit Time Enable	K2605	K2705	K2805	K2905	K21805	K21905	K22005	K22105	Bit
Latch Counter Enable	K2606	K2706	K2806	K2906	K21806	K21906	K22006	K22100	Bit
Comparison Output 1 Enable	K2607	K2707	K2807	K2907	K21807	K21907	K22007	K22107	
Carry Signal(Bit)	K2610	K2710	K2810	K29100	K21810	K21910	K22010	K22110	Bit
Borow Signal(Bit)	K2611	K2711	K2811	K29101	K21811	K21911	K22012	K22111	Bit
Comparison Output 0 Signal	K2612	K2712	K2812	K29102	K21812	K21912	K22013	K22112	Bit
Comparison Output 1 Signal	K2613	K2713	K2813	K29103	K21813	K21913	K22013	K22113	Bit

Parameter Setting Address of High-speed Counter ("S" type)							
ITEM	Description		Device Range for each Channel				Remark
	Setting Value	Setting Description	CH1	CH2	CH3	CH4	
Counter Enable	H0000 H0001	Linear Counter Setting Ring Counter Setting	K300	K330	K360	K390	Word
Pulse Input Mode Setting	H0000 H0001 H0002 H0003	1phase 1input 1multiplication 1phase 2input 1multiplication CW/CCW 2phase 4multiplication	K301	K331	K361	K391	Word
Comparison Output Mode Setting	H0000 H0001 H0002 H0003 H0004 H0005 H0006	(Single comparison) < (Single comparison) ≤ (Single comparison) = (Single comparison) ≥ (Single comparison) >>br>(Section comparison) Inclusion (Section comparison) Exclusion	K302	K332	K362	K392	Word
Internal Preset Value Setting	-2,147,483,648~2,147,483,647		K304	K334	K364	K394	Word
External Preset Value Setting	-2,147,483,648~2,147,483,647		K306	K336	K366	K396	Word
Ring Counter Value Setting	-2,147,483,648~2,147,483,647		K310	K340	K370	K400	Word
Min. Comparison Output Value Setting	-2,147,483,648~2,147,483,647		K312	K342	K372	K402	Word
Max. Comparison Output Value Setting	-2,147,483,648~2,147,483,647		K314	K344	K374	K404	Word
Comparison Output Contact Assignment	0x0000 0x0001 0x0002 0x0003 0x0004 0x0005 0x0006 0x0007	P20 P21 P22 P23 P24 P25 P26 P27	K320	K350	K380	K410	Word
Rotation Number Settiing per Unit Time	1 ~ 60000		K322	K352	K382	K412	Word
Pulse Number Setting per Rotation	1 ~ 60000		K323	K353	K383	K413	Word

Parameter Setting Address of High-speed Counter ("H" type)							
ITEM	Description		Device Range for each Channel				Remark
	Setting Value	Setting Description	CH1	CH2	CH3	CH4	
			CH5	CH6	CH7	CH8	
Counter Enable	H0000 H0001	Linear Counter Setting Ring Counter Setting	K300	K330	K360	K390	Word
			K2220	K2250	K2280	K2310	
Pulse Input Mode Setting	H0000 H0001 H0002 H0003	1phase 1input 1multiplication 1phase 2input 1multiplication CW/CCW 2phase 4multiplication	K301	K331	K361	K391	Word
			K2221	K2251	K2281	K2311	
Comparison Output 0 Mode Setting	H0000 H0001 H0002 H0003 H0004 H0005 H0006	(Single comparison) < (Single comparison) ≤ (Single comparison) = (Single comparison) ≥ (Single comparison) > (Section comparison) Inclusion (Section comparison) Exclusion	K302	K332	K362	K392	Word
			K2222	K2252	K2282	K2312	
Comparison Output 1 Mode Setting	H0000 H0001 H0002 H0003 H0004 H0005 H0006	(Single comparison) < (Single comparison) ≤ (Single comparison) = (Single comparison) ≥ (Single comparison) > (Section comparison) Inclusion (Section comparison) Exclusion	K303	K333	K363	K393	Word
			K2223	K2253	K2283	K2313	
Internal Preset Value Setting	-2,147,483,648 ~ 2,147,483,647		K304	K334	K364	K394	DWord
			K2224	K2254	K2284	K2314	
External Preset Value Setting	-2,147,483,648 ~ 2,147,483,647		K306	K336	K366	K396	DWord
			K2226	K2256	K2286	K2316	
Min. Ring Counter Value Setting	-2,147,483,648 ~ 2,147,483,645		K308	K338	K368	K398	DWord
			K2228	K2258	K2288	K2318	
Max. Ring Counter Value Setting	-2,147,483,648 ~ 2,147,483,645		K310	K340	K370	K400	DWord
			K2230	K2260	K2290	K2320	
Min. Comparison Output Value Setting	-2,147,483,648 ~ 2,147,483,645		K312	K342	K372	K402	DWord
			K2232	K2262	K2292	K2322	
Max. Comparison Output Value Setting	-2,147,483,648 ~ 2,147,483,645		K314	K344	K374	K404	DWord
			K2234	K2264	K2294	K2324	
Comparison Output 0 Contact Assignment	0xFFFF 0x0000 0x0001 0x0002 0x0003 0x0004 0x0005 0x0006 0x0007 0x0008 0x0009 0x000A 0x000B 0x000C 0x000D 0x000E 0x000F	No use P20 P21 P22 P23 P24 P25 P26 P27 P28 P29 P2A P2B P2C P2D P2E P2F	K320	K350	K380	K410	Word
			K2240	K2270	K2300	K2330	

Parameter Setting Address of High-speed Counter ("H" type)

ITEM	Description		Device Range for each Channel				Remark
	Setting Value	Setting Description	CH1	CH2	CH3	CH4	
			CH5	CH6	CH7	CH8	
Comparison Output 1 Contact Assignment	0xFFFF 0x0000 0x0001 0x0002 0x0003 0x0004 0x0005 0x0006 0x0007 0x0008 0x0009 0x000A 0x000B 0x000C 0x000D 0x000E 0x000F	No use P20 P21 P22 P23 P24 P25 P26 P27 P28 P29 P2A P2B P2C P2D P2E P2F	K321	K351	K381	K411	Word
			K2241	K2271	K2301	K2331	
Rotation Number Settiing per Unit Time	1 ~ 60000		K322	K352	K382	K412	Word
			K2242	K2272	K2302	K2332	
Pulse Number Setting per Rotation	1 ~ 60000		K323	K353	K383	K413	Word
			K2243	K2273	K2303	K2333	

High Speed Counter Monitoring

Special Function Monitoring

Special Function Monitoring in SoftMaster can monitor operation condition and data of high speed counter while PLC is on-line.

Device Monitoring

While PLC is on-line, Device Monitoring can monitor the operation condition and data by monitoring the device setting area.

Parameter Setting Address of High-speed Counter ("S" type)

Item	Device Range for Each Channel				Remark
	CH1	CH2	CH3	CH4	
Present Counter Value	K262	K272	K282	K292	Double Word
No. of Rotation per Unit Time	K264	K274	K284	K294	Double Word
Error Code	K266	K276	K286	K296	Word

Parameter Setting Address of High-speed Counter ("H" type)

Item	Device Range for Each Channel								Remark
	CH1	CH2	CH3	CH4	CH5	CH6	CH7	CH8	
Present Counter Value	K262	K272	K282	K292	K2182	K2192	K2202	K2212	Word
No. of Rotation per Unit Time	K264	K274	K284	K294	K2184	K2194	K2204	K2214	Word
Error Code	K266	K276	K286	K296	K2186	K2196	K2206	K2216	Word

Error Code of High-speed Counter		
Error Code(Decimal)	Error Description	Remark
20	Out of Counter type range	
21	Out of Pulse input type range	
22	When Requesting RUN of CH1[3] during 2-phase operation of CH0[2] (Use of CH1[3] is not available during 2-phase operation of CH0[2])	
23	Out of Comparison output type range	
25	Internal preset value setting error(Out of counter range)	
26	External preset value setting error(Out of counter range)	
27	Ring counter setting error(Ring counter value should be set as 2 or more)	
28	Comparison minimum value setting error(Out of minimum input range)	
29	Comparison maximum value setting error(Out of maximum input range)	
30	Minimum comparison output1 > Maximum comparison output1	
31	Contact assignment value setting error of comparison output	
34	Out of unit time setting range	
35	Out of pulse value range per rotation	
36	Comparison minimum value setting error except maximum output range. OUT1	'H' type
37	Comparison maximum value setting error except maximum output range. OUT1	'H' type
38	Minimum comparison output1 > Maximum comparison output1	'H' type
39	Contact assignment value setting error of comparison output1	'H' type

NOTE. In case that two mote errors are happened, the module saves the last error code and previous error code is removed.

Specifications

Positioning Function

Performance

No. of Control Axis		2-axis			
Interpolation		2-axis linear interpolation			
Output type		MLM S type : Pulse + Direction		MLC H type : Pulse + Direction CW / CCW output	
Control Mode		Position control, Speed control, Speed / Position switching control, Position / Speed switching control			
Control Unit		Pulse			
Positioning Data		30-step pattern(MLM S type) and 80-step(MLC H type)for each axis (set in SoftMaster) (Operation step number: 1~30, MLC:1~80)			
Positioning Monitor		Dedicated monitoring function for positioning in SoftMaster			
Back-up		Permanent Backup of downloaded parameter and running data (FLASH memory)			
		2-month Super Cap. Backup of parameter during operation(MLM) Battery back-up(MLC)			
		Stored Data into RAM by command 'WRT' (FLASH memory)			
Positioning	Positioning Method	Absolute / Incremental method			
	Positioning Range	- 2,147,483,648 ~2,147,483,647			
	Speed Range	1~ 100,000 (pulse / sec)			
	Acceleration / Deceleration Type	Trapezoidal acceleration / deceleration			
	Acceleration / Deceleration Time	1~ 10,000 msec (4 patterns each can be set)			
Maximum Output Pulse		100 kpps			
Maximum Distance of Connections		2 meters (6.56 feets)			

Electrical

Output	Signal	Output Pulse			
	Rated Input Voltage	DC 5 ~ 24V			
	Load Voltage Range	DC 4.75 ~ 26.4V			
	Max. Load Current/Inrush Current	100mA (1 point) 1A / 10mseec or less			
	Max. Voltage Drop(ON)	DC 0.3V or less			
	Leakage Current(OFF)	0.1mA or less			
	Response Time	100μs or less			
Input	Signal	External High Limit	External Low Limit	Approximate Zero	Zero
	Rated Input Voltage / Current	DC 24V / 7mA		DC 24V / 4mA	
	Load Voltage Range	DC 20.4 ~ 28.8 V			
	ON Voltage / Current	DC 19V / 5.7 mA or more		DC 19V / 3.4 mA or more	
	OFF Voltage / Current	DC 6V / 1.8 mA or less		DC 6V / 1.1 mA or less	
	Input Resistance	3.3 KΩ		5.6 KΩ	
	Response Time	0.5 ms or less			

Positioning Function Terminals ("S" type)

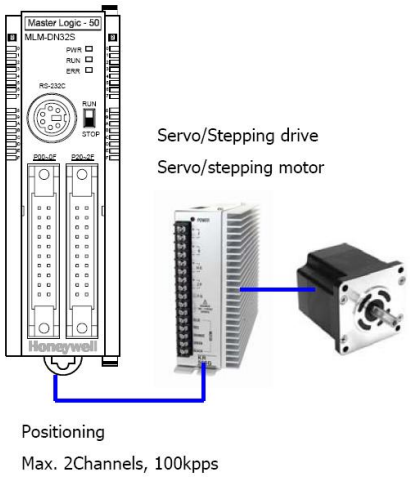

Item	Pin Number X axis	Pin Number Y axis	Signal Name		Direction of Positioning Signal	Operating Direction
Output	A1	A2	Pulse	Pulse output (open collector)	→	-
	A3	A4	Direction	Pulse output (open collector)	→	-
	A9/A10		DC24V	External 24V Power supply	→	-
	B9/B10		Output COM	External 24V GND	→	
Input	A1	A3	Limit L	Low Limit	←	Edge
	A2	A4	Limit H	High Limit	←	Edge
	A5	A7	DOG	Near Point	←	Edge
	A6	A8	Zero	Zero signal (+24V)	←	Edge
	A9/10, B9/10		Input COM	COMMON	←	-

Positioning Function Terminals ("H" type)

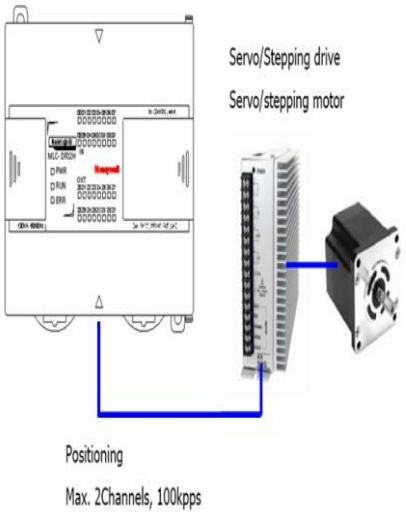

Item	Pin Number X axis	Pin Number Y axis	Signal Name		Direction of Positioning Signal	Operating condition
Output	P0020	P0021	Pulse	Pulse/CW (Open collector)	→	DC5~24V
	P0022	P0023	Direction	Direction/CCCW (Open collector)	→	
	P		DC12V	External power supply	→	
	COMO		Output COM	External 24V GND	→	
Input	P0008	P000A	Limit L	Low limit	←	7.4mA/24V
	P0009	P000B	Limit H	High limit	←	
	P000C	P000E	DOG	Near point	←	
	P000D	P000F	Origin	Zero signal(+24V)	←	
	COM		Input COM	Common	←	

Storage Range of Positioning Parameter

Assigned Parameters are stored on the following memory range. While operating PLC, command parameters can be changed by changing data in corresponding range.

	Item	Setting Range	Initial Value	Device Range X axis	Device Range Y axis	Remark
Basic Parameter	Positioning	0:Disabled,1:Enabled	0	K4870	K5270	Bit
	Pulse Output Level	0:Low active, 1:High active	0	K4871	K5271	Bit
	Pulse Output mode	0:CW/CCW, 1:Pulse/Direction	0	K4873	K5273	Bit
	M Code output mode	0:None, 1:WITH, 2:AFTER	0	K4681 K4682	K5081 K5082	Bit
	Bias Speed	1~100,000 [Pulse/sec]	1	K450	K490	Double Word
	Speed Limit	1~100,000 [Pulse/sec]	100,000	K452	K492	Double Word
	Acceleration Time1	0~10,000 [Unit:msec]	500	K454	K494	Word
	Deceleration Time1	0~10,000 [Unit:msec]	500	K455	K495	Word
	Acceleration Time2	0~10,000 [Unit:msec]	1,000	K456	K496	Word
	Deceleration Time2	0~10,000 [Unit:msec]	1,000	K457	K497	Word

	Item	Setting Range	Initial Value	Device Range		Remark
				X axis	Y axis	
Basic Parameter	Acceleration Time3	0~10,000 [Unit:msec]	1,500	K458	K498	Word
	Deceleration Time3	0~10,000 [Unit:msec]	1,500	K459	K499	Word
	Acceleration Time4	0~10,000 [Unit:msec]	2,000	K460	K500	Word
	Deceleration Time4	0~10,000 [Unit:msec]	2,000	K461	K501	Word
	Soft High Limit	-2,147,483,648~2,147,483,647[pulse]	2,147,483,647	K462	K502	Double Word
	Soft Low Limit	-2,147,483,648~2,147,483,647[pulse]	-2,147,483,648	K464	K504	Double Word
	Backlash Compensation Amount	0~65,535[pulse]	0	K466	K506	Word
	Detection of Soft High/Low Limit during equal speed operation	0:Disabled,1:Enabled	0	K4684	K5084	Bit
	Use of High/Low Limit	0:Disabled,1:Enabled	1	K4872	K5272	Bit
Zero/ Manual Parameter	Zero Address	-2,147,483,648~2,147,483,647[pulse]	0	K469	K509	Double Word
	Zero-return High Speed	1~100,000 [Pulse/sec]	5,000	K471	K511	Double Word
	Zero-return Low Speed	1~100,000 [Pulse/sec]	500	K473	K513	Double Word
	Zero-return Acceleration Time	0~10,000 [Unit:msec]	1,000	K475	K515	Word
	Zero-return Deceleration Time	0~10,000 [Unit:msec]	1,000	K476	K516	Word
	Zero-return Dwell Time	0~50,000 [Unit:msec]	0	K477	K517	Word
	Zero-return method	0 : Zero detection after near zero OFF 1: Zero detection after deceleration when near zero is ON 2 : Zero detection by near zero	0	K4780 K4781	K5180 K5181	Word
	Zero-return direction	0:Forward, 1:Reverse	1	K4782	K5182	Bit
	JOG High Speed	1~10,000 [Pulse/sec]	5,000	K479	K519	Double Word
	JOG Low Speed	1~10,000 [Pulse/sec]	1,000	K481	K521	Double Word
	JOG Acceleration time	0~65,535[Unit:msec]	1,000	K483	K523	Word
	JOG Deceleration time	0~65,535[Unit:msec]	1,000	K484	K524	Word
	Inching Speed	0~65,535[Pulse/sec]	100	K485	K525	Word

Positioning Dedicated Instruction

Instruction*1)	Description	Instruction Operand*1)
ORG	Zero Return Start	Slot, Instruction axis
FLT	Floating-point zero setting	Slot, Instruction axis
DST	Direct Start	Slot, Instruction axis, Position, Speed, Dwell time,
		M code, Control word
IST	Indirect Start	Slot, Instruction axis, Step number
LIN	Linear Interpolation Start	Slot, Instruction axis, Step number, Axis information
SST	Simultaneous Start	Slot, Instruction axis, X-axis step number Y-axis step number, Z-axis step number, Axis information
VTP	Speed/Position Conversion	Slot, Instruction axis
PTV	Position/Speed Conversion	Slot, Instruction axis

Instruction*1)	Description	Instruction Operand*1)
STP	Stop	Slot, Instruction axis, Deceleration
SSP	Position Synchronization	Slot, Instruction axis, Step number, Master-axis position, Master-axis setting
SSS	Speed Synchronization	Slot, Instruction axis, Master-axis ratio, Slave-axis ratio, Master-axis setting
POR	Position Override	Slot, Instruction axis, Position
SOR	Speed Override	Slot, Instruction axis, Speed
PSO	Positioning Speed	Slot, Instruction axis, Position, Speed
INCH	Inching	Slot, Instruction axis, Inching amount
SNS	Changing Start Step number	Slot, Instruction axis, Step number
MOF	M code OFF	Slot, Instruction axis
PRS	Present Position Preset	Slot, Instruction axis, Position
EMG	Emergency Stop	Slot, Instruction axis
CLR	Error Reset, Output Disable Annulment	Slot, Instruction axis, Pulse output Enable/Disable
WRT	Parameter / Operation Data Saving	Slot, Instruction axis, Axis information

*1) In instruction, the slot should be assigned as number '0'.

Operation Data Range for Positioning

Step Number	Item	Specification	Initial Value	Device Range		Remark
				X-axis	Y-axis	
1	Coordinates	0:Absolute, 1:Relative	Absolute	K5384	K8384	Bit
	Operation Pattern	0:End, 1:Continue, 2:Repeat	End	K5382~3	K8382~3	Bit
	Control Method	0:Position control, 1:Speed control	Position	K5381	K8381	Bit
	Operation Method	0:Single operation, 1:Repeated Operation	Single	K5380	K8380	Bit
	Repeating Step	0~30 ("H" type : 0 ~80)	0	K539	K839	Word
	Targeted Position	-2,147,483,648~2,147,483,647[pulse]	0	K530	K830	Double Word
	M Code Number	0~65,535	0	K537	K837	Word
	Accel/Decel Number	0:Number1, 1:Number2 2:Number3, 3: :Number4	0	K5386	K8386	Bit
				K5387	K8387	Bit
	Operation Speed	1~100,000[pulse/sec]	0	K534	K834	Double Word
	Dwell Time	1~50,000[pulse/sec]	0	K536	K836	Word
2	Same items as Step number 1			K540~549	K840~849	-
3	Same items as Step number 1			K550~559	K850~859	-
4~29	Same items as Step number 1			K560~819	K860~1119	-
30	Same items as Step number 1			K820~829	K1120~1129	-
31 (Only "H" type)	Coordinates	0:Absolute, 1:Relative	Absolute	K23484	K28484	Bit
	Operation Pattern	0:End, 1:Continue, 2:Repeat	End	K23482~3	K28482~3	Bit
	Control Method	0:Position control, 1:Speed control	Position	K23481	K28481	Bit
	Operation Method	0:Single operation, 1:Repeated Operation	Single	K23480	K28480	Bit

Step Number	Item	Specification	Initial Value	Device Range		Remark
				X-axis	Y-axis	
31 (Only "H" type)	Repeating Step	0~30 ("H" type : 0 ~80)	0	K2349	K2849	Word
	Targeted Position	-2,147,483,648~2,147,483,647[pulse]	0	K2340	K2840	Double Word
	M Code Number	0~65,535	0	K2347	K2847	Word
	Accel/Decel Number	0:Number1, 1:Number2 2:Number3, 3: :Number4	0	K23486 K23487	K28486 K28487	Bit
	Operation Speed	1~100,000[pulse/sec]	0	K2344	K2844	Double Word
	Dwell Time	1~50,000[pulse/sec]	0	K2346	K2846	Word
32	Same items as Step number 31			K2350~2359	K2850~2859	"H" type only
33	Same items as Step number 31			K2360~2369	K2860~2869	
34~79	Same items as Step number 31			K2370~2829	K2870~3329	
80	Same items as Step number 31			K2830~2839	K3330~3339	

Operation Monitoring Range for Positioning

Item	Device Range						Remark
	X axis			Y axis			
	Word	Bit	Address	Word	Bit	Address	
Busy Signal	K420	0	K4200	K430	0	K4300	Operation Monitoring
ERROR		1	K4201		1	K4301	
Positioning Completed		2	K4202		2	K4302	
M code ON		3	K4203		3	K4303	
Zero Determination		4	K4204		4	K4304	
Output Disable		5	K4205		5	K4305	
Stop		6	K4206		6	K4306	
High Limit Detection		8	K4208		8	K4308	
Low Limit Detection		9	K4209		9	K4309	
Emergency Stop		A	K420A		A	K430A	
Forward/Reverse Rotation		B	K420B		B	K430B	
Operation (Acceleration)		C	K420C		C	K430C	
Operation (Fixed Speed)		D	K420D		D	K430D	
Operation (Deceleration)		E	K420E		E	K430E	
Operation (Dwell)		F	K420F		F	K430F	
Operation Control (Position Control)	K421	0	K4210	K431	0	K4310	
Operation Control (Speed Control)		1	K4211		1	K4311	
Operation Control (Linear Interpolation)		2	K4212		2	K4312	

Item	Device Range						Remark
	X axis			Y axis			
	Word	Bit	Address	Word	Bit	Address	
Zero Return	K421	5	K4215	K431	5	K4315	Operation Monitoring
Position Synchronization		6	K4216		6	K4316	
Speed Synchronization		7	K4217		7	K4317	
JOG Low Speed		8	K4218		8	K4318	
JOG High Speed		9	K4219		9	K4319	
Inching		A	K421A		A	K431A	
Present Position	K422	-	K422	K432	-	K432	
Present Speed	K424	-	K424	K434	-	K434	
Step Number	K426	-	K426	K436	-	K436	
Error Code	K427	-	K427	K437	-	K437	
M Code	K428	-	K428	K438	-	K438	
JOG Operation (Start)	K429		K4290	K439	0	K4390	JOG Command
JOG Forward Operation			K4291		1	K4391	
JOG Reverse Operation			K4292		2	K4392	
JOG Low/High Speed			K4293		3	K4393	

Positioning Function Wiring

- With DC5V

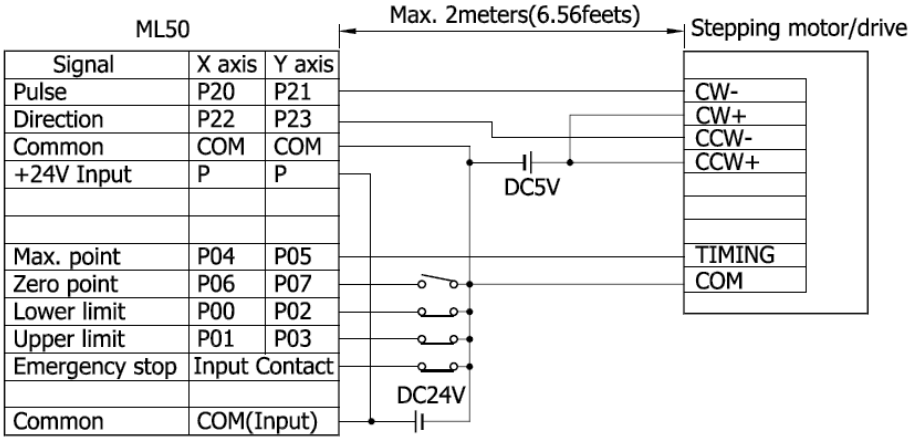

- With DC24V

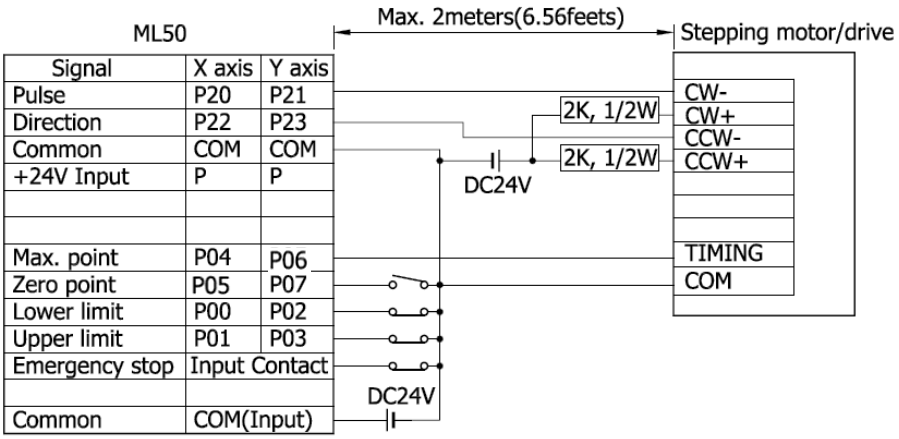

Specifications

PID Control

Features

- Built-in PID control function in ML50's main unit
- Various control operation (P, PI, PD, PID, On/Off)
- PWM (Pulse Width Modulation) output of control result
- Forward, Reverse, Forward / Reverse Mixed Operation
- Enhanced response to disturbance with cascade loop
- Available to use 2 set values and PID parameters simultaneously according to operation zone
- Various PID control configurations with its SV Ramp, PV Tracking, Delta MV, MV Preset, Alarm functions

Performance

No. of Control Loop		16-loop independent control
Control Mode		P control, PI control, PD control, PID control
Control Period		10ms ~ 6563.5 ms (Setting unit: 0.1ms)
Function	Forward / Reverse Mixed Control	Switching control direction automatically when exceeding dead band
	Cascade	Improved control precision by serial connection between Master loop and Slave loop
	SV Ramp	Preventing overload caused by excessive SV change by setting variation slope
	Alarm	Improved control stability with various alarm function such as MV high limit / low limit, PV high limit / low limit, PV variation width
	Auto Tuning	Auto tuning with improved auto-tuning algorithm
	Additional Function	PWM output, PV tracking, Δ MV, Δ PV, etc.

Pulse catch / Input Filter / Task

Pulse Catch

When the On-condition time of input signal (P0000~P0007) is shorter than 1 scan time (Min. 50μs), Pulse catch processes the input signal as normal input.

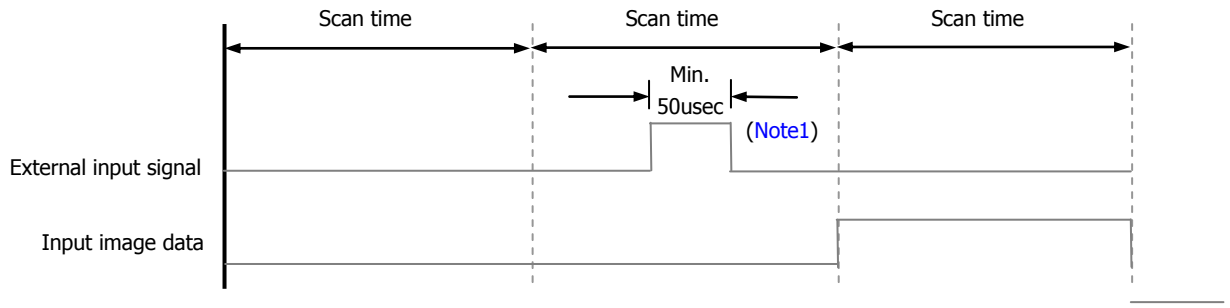

Model	MLM	MLC	
No. of Setting Points	8 points : P000~P007	4 points : P000~P003	4 points : P000~P007
Min. Pulse Width	50usec	10usec	50usec

Input Filter

Input filter prevents processing of input signal that is shorter that the filtering time. (Filtering time set by parameter). In the application site where noise is frequently generated. Input filter prevents wrong input caused by noise.

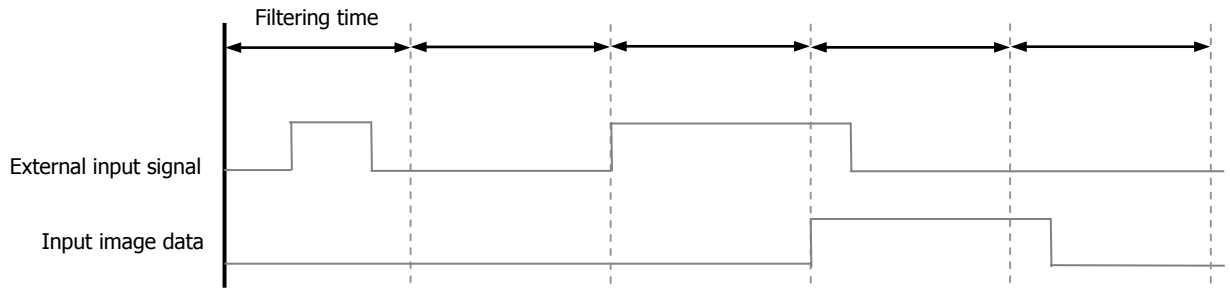

No. of Setting Points	Every input contact
Input Filtering Time Setting	Assigning standard input filter / Assigning for each module
Setting Range	1-100msec(1, 3, 5, 10, 20, 70, 100)

Task

Task function is the processing method of internal / external signal generated periodically or none (Total 25 Tasks can be assigned). It stops operation of scan program for the moment and then executes the assigned task.

Types of Task

Initialization Task Setting		Running a task one time before INIT_DONE at initial execution
Fixed Cycle Task Setting	No. of Setting Points	8 points
	Setting Range	1 ~ 42,94,967,295 msec
External Points Task Setting	No. of Setting Points	8 points: P000 ~ P007
	Minimum Pulse Width	Min. 50usec
	Condition	Up, Down, Change
Internal Device Task Setting	No. of Setting Points	8 points
	Condition	Up, Down, change, On, Off

Specifications

Digital Input

Model		MLE-DC08A	MLE-DC16A	MLE-DC32A
Input points		8	16	32
Rated input voltage / current		DC24V / 4mA		
Operation voltage range		DC20.4 ~ 28.8V (Ripple rate < 5%)		
On Input Voltage / Current		Min. DC19V / 3mA		
Off Input Voltage / Current		Max. DC 6V / 1mA		
Input resistance		5.6kΩ		
Response time	Off -> On	1 / 3 / 5 / 10 / 20 / 70 / 100ms (setting by CPU parameter) initial value: 3ms		
	On -> Off			
Insulation resistance		10MΩ or more by megger		
COMMON method		8 points / COM	16 points / COM	32 points / COM
Internal current consumption		30mA	40mA	50mA

Wiring

MLE-DC08A

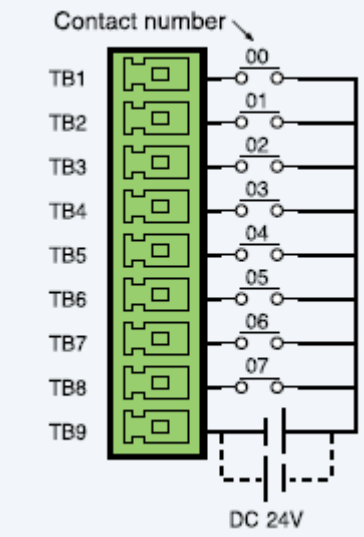

MLE-DC16A

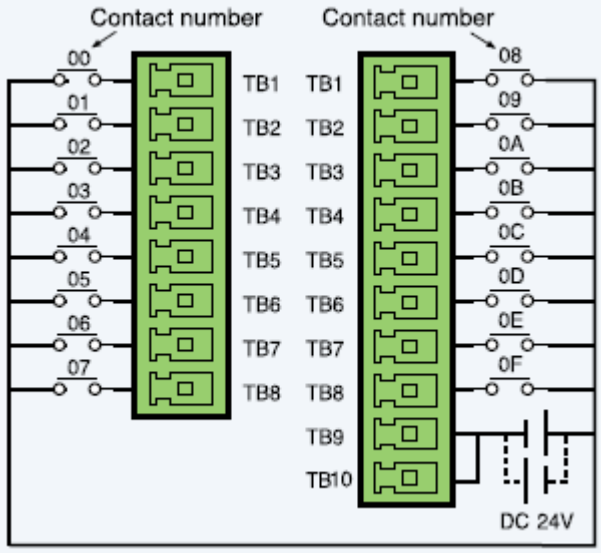

MLE-DC32A

Note the wiring with Smart Link

Specifications

Digital Open Collector Output (Transistor)

Model		MLE-TN08A	MLE-TN16A	MLE-TN32A
Output points		8	16	32
Rated load voltage		DC12 / 24V		
Load voltage range		DC 10.2V ~ 26.4V		
Max load current		0.5A / 1 point	0.5A / 1 point, 2A / COM	
Off leakage current		0.1mA or less		
Max. voltage drop (On)		DC 0.4V		
Response time	Off -> On	1 ms or less		
	On -> Off	1 ms or less (Rated load, resistive load)		
Insulation resistance		10MΩ or more by megger		
COMMON method		8 points / COM	16 points / COM	32 points / COM
Internal current consumption		40mA	60mA	120mA

Wiring

MLE-TN08A

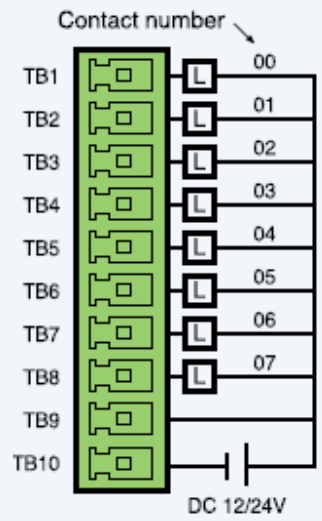

MLE-TN16A

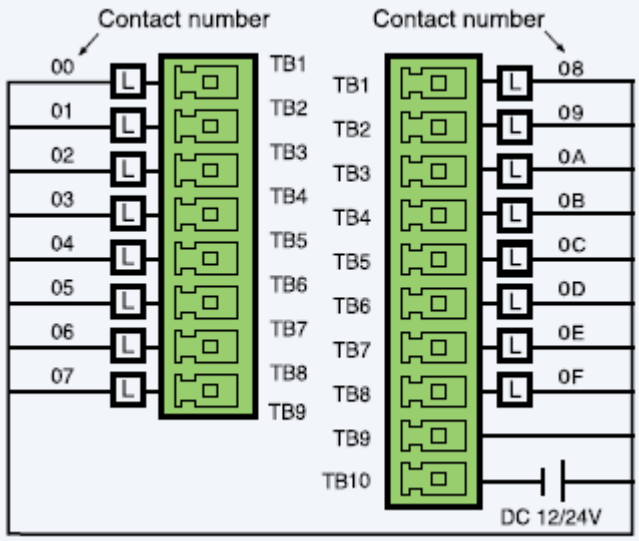

MLE-TN32A

Note the wiring with Smart Link

Specifications

Digital Relay Output

Model		MLE-RY08A	MLE-RY16A
Output points		8	16
Insulation method		Relay Insulation	
Rated input voltage / current		DC 24V 2A (resistive load) / AC 220V 2A (COSΨ = 1), 5A / COM	
Min. load voltage / current		DC5V 1mA	
Max. load voltage		AC 250V, DC 125V	
Off leakage current		0.1mA (AC 220V, 60Hz)	
Max. on/off frequency		3,600 times / hr	
Surge absorber		None	
Service life	Mechanical	20million times or more	
	Electrical	Rated load voltage / current 100,000 times or more	
		AC 200V / 1.5A, AC 240V / 1A (COSΨ = 0.7) 100,000 times or more	
		AC 200V / 1A, AC 240V / 0.5 (COSΨ = 0.35) 100,000 times or more	
		DC 24V / 1A, DC 100V / 0.1A (L / R = 7ms) 100,000 times or more	
Response time	Off -> On	10ms or less	
	On -> Off	12ms or less	
COMMON method		8 points / 1COM	
Internal current consumption		230mA	420mA
Operation indicator		Output On, LED On	
External connection method		9-pin terminal block connector	9-pin terminal block connector X 2

Wiring

MLE-RY08A	MLE-RY16A
AWG#22(0.3mm^2) or greater	AWG#22(0.3mm^2) or greater

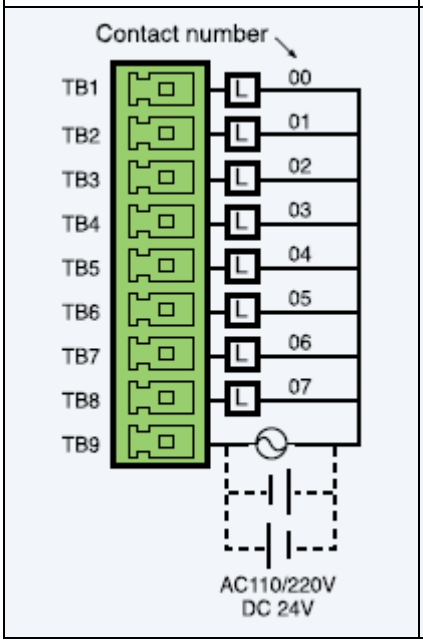

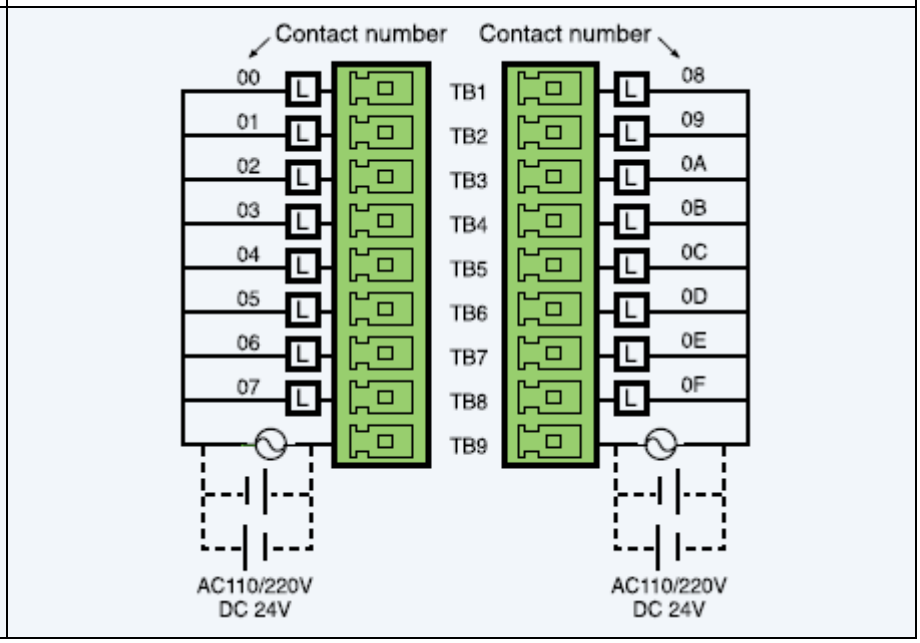

Specifications		
MLE-DR16A (Digital input / Relay output)		
DC Input		
Input points		8
Insulation method		Photo coupler
Rated input voltage		DC 24V
Rated input current		4mA
Operation voltage range		DC20.4 ~ 28.8V (Ripple rate < 5%)
On voltage / On current		DC19V or more / 3mA or more
Off voltage / Off current		DC6V or less / 1mA or less
Input resistance		5.6kΩ
Response time	Off -> On	1 / 3 / 5 / 10 / 20 / 70 / 100ms (setting by CPU parameter) init value: 3ms
	On -> Off	
COMMON method		8 points / COM
Weight		81g
Relay output		
Output points		8
Insulation method		Relay Insulation
Rated input voltage / current		DC 24V 2A (resistive load) / AC 220V 2A (COSΨ = 1), 5A /COM
Min. load voltage / current		DC5V 1mA
Max. load voltage		AC250V, DC125V
Off leakage current		0.1mA (AC220V, 60Hz)
Max. on / off frequency		3,600 times / hr
Surge absorber		None
Service life	Mechanical	20million times or more
	Electrical	Rated load voltage / current 100,000 times or more
		AC 200V / 1.5A, AC 240V / 1A (COSΨ = 0.7) 100,000 times or more
		AC 200V / 1A, AC 240V / 0.5 (COSΨ = 0.35) 100,000 tiems or more
		DC 24V / 1A, DC 100V / 0.1A (L / R = 7ms) 100,000 times or more
Response time	Off -> On	10ms or less
	On -> Off	12ms or less
COMMON method		8 points / 1COM
Internal current consumption		280mA
Operation indicator		Output On, LED On
External connection method		9-pin terminal block connector

Wiring	
8-point DC input	8-point Relay Output
AWG#22(0.3mm^2) or greater	AWG#22(0.3mm^2) or greater
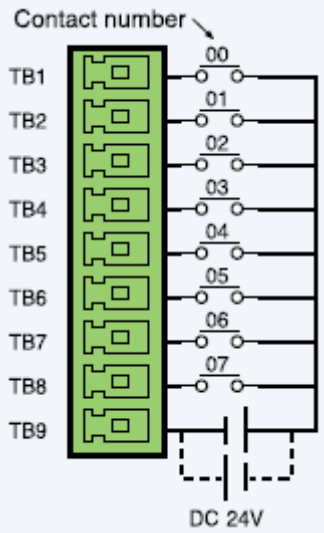	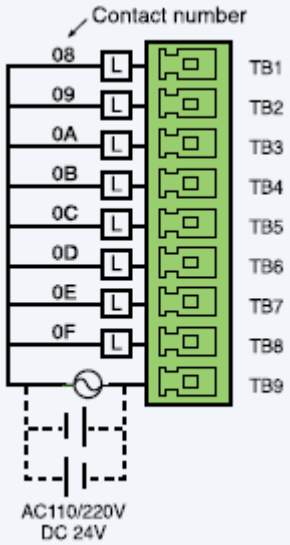

Specifications

Analog Input / Output

Performance

Model		Analog Input			Analog Output
		MLF-AD04A			MLF-DV04A
Analog Range		DC 0 ~ 10V(Input Resistance : 1MΩ min.) DC 4 ~ 20mA DC 0 ~ 20mA(Input Resistance 250Ω)			DC 0 ~10V(Load Resistance ≥ 1kΩ)
Analog Range Selection		- Analog input range can be selected by user (sequence) program - Each input range can be set for each channel.			-
Digital Data	Analog Range	0 ~ 10V	4~20mA	0 ~ 20mA	0 ~ 10V
	Unsigned Value	0 ~ 4000			0 ~ 4000
	Signed Value	-2000 ~ 2000			-2000 ~ 2000
	Precise Value	0 ~ 1000	400 ~ 2000	0 ~ 2000	0 ~ 1000
	Percentile Value	0 ~ 1000			0 ~ 1000
	Data format of digital output is set by user program of software package. (Setting for each channel is available.)				
Resolution(1/4000)		2.5mV, at 0 ~ 10V			2.5mV
		5.0uA, at 4~20mA or 0~20mA			
Max. Conversion Speed		1.5msec / channel			1msec / channel
Max. Absolute Input / Output		±15V		±25mA	±15V
Accuracy		±0.5% or less			±0.5% or less
Analog I/O Channels		4 channel / module			
Insulation Method		Photo coupler insulation between I/O terminal and power supply.			
Connection Terminal		11-point terminal block			
Occupied I/O Points		Fixed type : 64points			
Current Consumption		DC5V:120mA(Internal input) DC24V:60mA(External input)			DC5V:110mA(Internal input) DC24V:70mA(External input)

Names and Functions

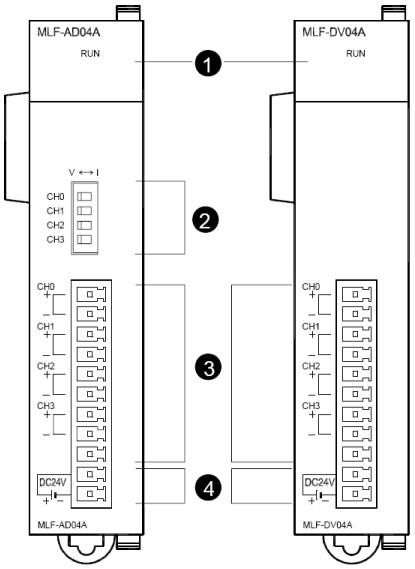

No	Name	Description
1	RUN LED	Indicates condition of module • LED ON : Normal condition • LED Flicking(ON/OFF) : Error • LED OFF : Power off or Module malfunction
2	Input Selection Switch	Voltage/Current selection terminal • V : Voltage input selection • I : Current input selection
3	External Connection Terminal	External device connection
4	External Power Supply Terminal	External DC24V input

Analog Input Wiring

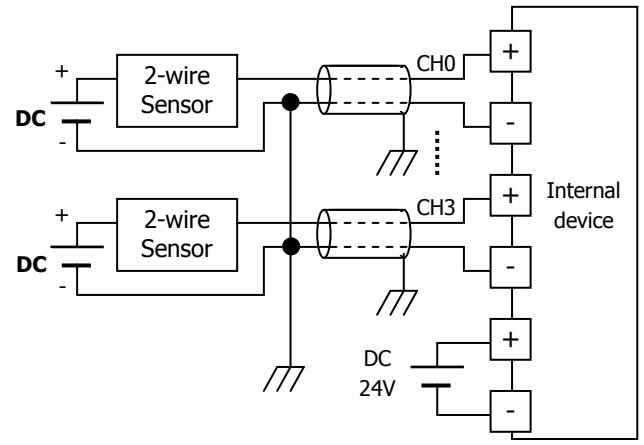

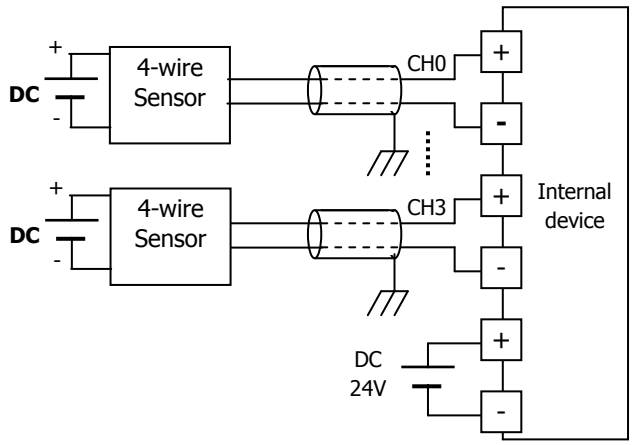

* Use 22AWG, 2 conductor, twist shield cable when wiring between analog module and external device.

Analog / Digital Conversion Characteristics (MLF-AD04A)

Output Value Selection	Precise Value 4~20mA	Precise Value 0~20mA	Precise Value 0~10V	Percentile Value	-2,000 ~ 2,000	0 ~ 4,000
Digital Output	2,023 2,000	2,023 2,000	1,011 1,000	1,011 1,000	2,047 2,000	4,047 4,000
	1,600	1,500	750	750	1,000	3,000
	1,200	1,000	500	500	0	2,000
	800	500	250	250	-1,000	1,000
	400 381	0	0	0	-2,000 -2,048 *Note1)	0 -48 *Note1)
Analog Input	0 ~ 10V 0 ~ 20mA 4 ~ 20mA					

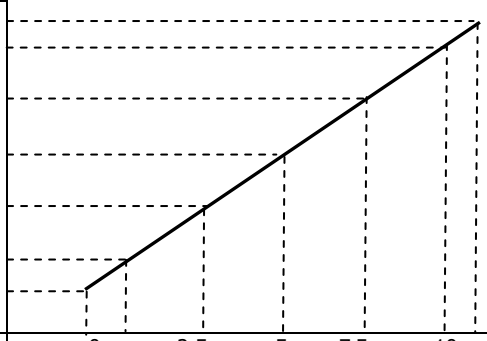

0	2.5	5	7.5	10
0	5	10	15	20
4	8	12	16	20

* Note1) Supported in case of analog input is 4~20mA.

Analog Output Wiring

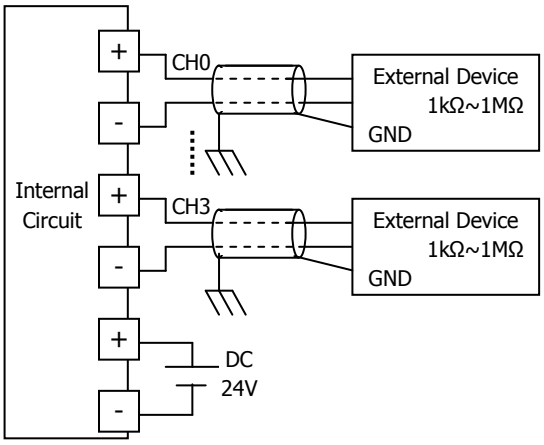

Analog output

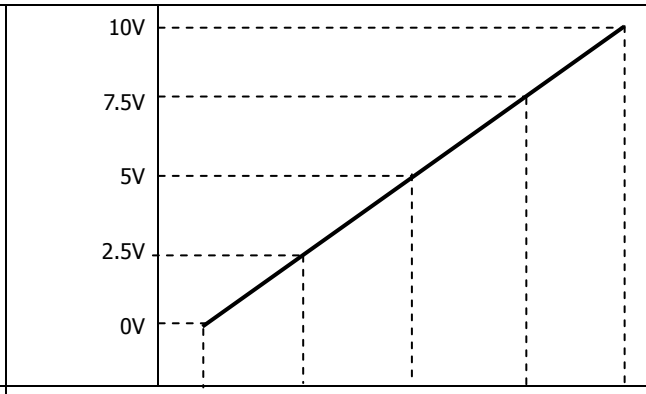

Digital output					
0~4000	0	1000	2000	3000	4000
-2000~2000	-2000	-1000	0	1000	2000
Percentile	0	250	500	750	1000

Specifications

RTD

Performance

Model		MLF-RD04A
Number of Channels		4
Sensor type	PT100	IEC Pub 751, JIS C1604, KS C1603
	JPT100	JIS C1604, KS C1603
Temperature range	PT100	- 200 ~ 600℃
	JPT100	- 200 ~ 600℃
Digital output	PT100	- 2000 ~ 6000
	JPT100	- 2000 ~ 6000
Accuracy	25℃	±0.3% or less
	0 ~ 55℃	±0.5% or less
Conversion speed		40ms / channel
Wiring method		3 Wires
Current consumption	Internal DC5V	100mA
	External DC24V	100mA

Names and Functions

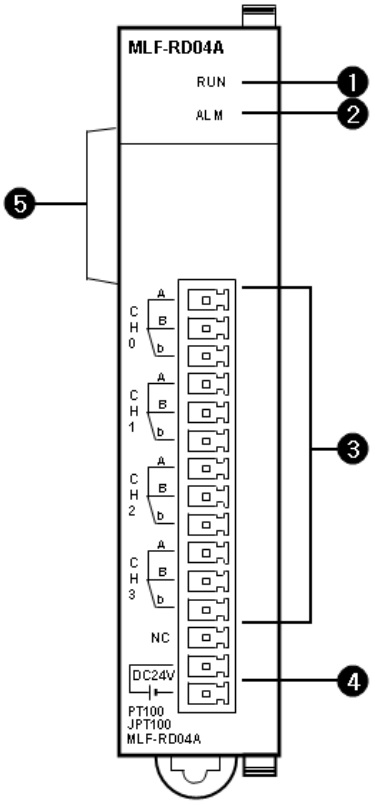

No	Name	Description
1	RUN LED	Displays the hardware operation status (Fatal fault) • On: Normal status • Flickering: Error (0.2s flickering) • Off: hardware error or power off
2	ALARM LED	Displays the status of the channels (Light fault) • Flickering: Line disconnection (1s flickering) • Off: Normal status
3	External Connection Terminal	3-wire RTD sensors can be connected
4	External Power Supply Terminal	External DC24V input
5	Expansion connector	Connects the module with an expansion module

Analog Input Wiring

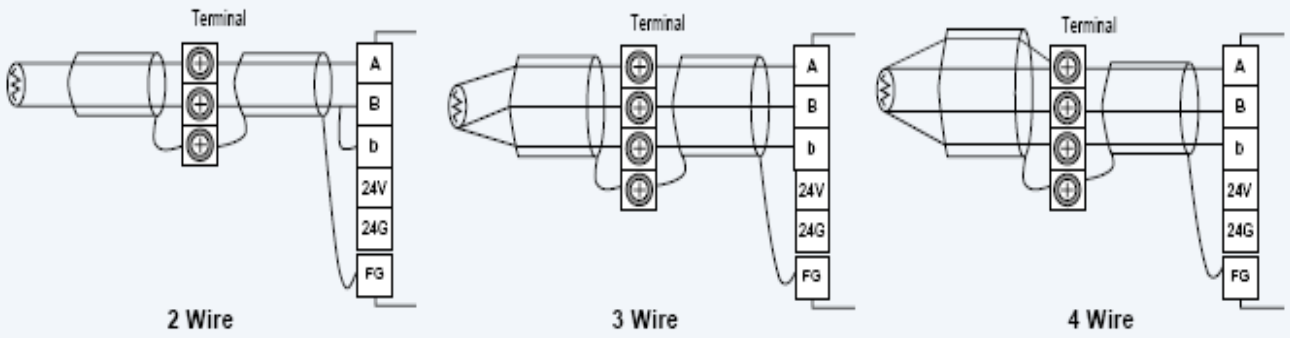

Temperature Conversion Characteristics (MLF-RD04A)

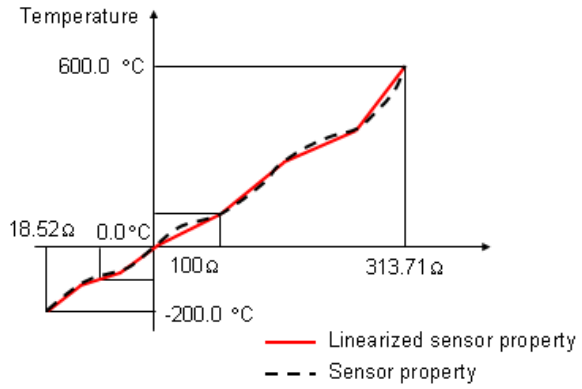

Pt100 (IEC Pub 751, JIS C1604)

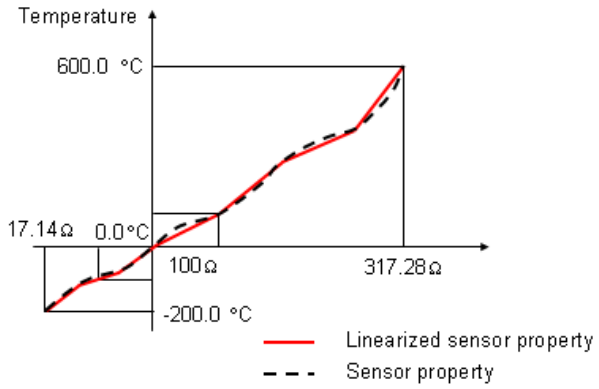

JPt100 (JIS C1604, KS C1603)

Specifications

Thermocouple

Performance

Model		MLF-TC04S
Number of Channels		4
Sensor type		Thermocouple K / J / T / R IEC Pub 584-2, JIS C1602, KS C1602
Temperature range	K(CA)	- 200.0℃ ~ 1300.0℃ (-328.0℉ ~ 2372.0℉)
	J(IC)	- 200.0℃ ~ 1200.0℃ (-328.0℉ ~ 2192.0℉)
	T(CC)	- 200.0℃ ~ 400.0℃ (-328.0℉ ~ 752.0℉)
	R	0.0℃ ~ 1700.0℃ (32.0℉ ~ 3092.0℉)
Digital output	Temperature display unit	Display down to one decimal place K, J, T: 0.1℃ / R: 0.5℃
	Scaling display (Defined by user)	Unsigned scaling (0 ~ 65535)
		Signed scaling (-32768 ~ 32767)
Accuracy	Normal temperature(25℃)	±0.2%
	Temperature coefficient (0 ~ 55℃)	±100 ppm / ℃
Conversion speed		50ms / channel
Warming-up time		15 minutes or more
Terminal		11 point
I/O points occupied		64 points
Current consumption	Internal DC5V	100mA
	External DC24V	100mA

Names and Functions

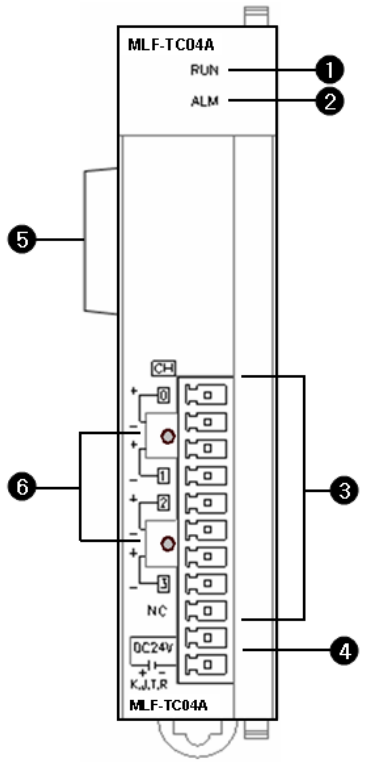

No	Name	Description
1	RUN LED	Displays the hardware operation status (Fatal fault) • On: Normal status • Flickering: Error (0.2s flickering) • Off: hardware error or power off
2	ALARM LED	Displays the status of the channels (Light fault) • Flickering: Line disconnection (1s flickering) • Off: Normal status
3	External Connection Terminal	Connects external thermocouple sensor (K, J, T, R Type)
4	External Power Supply Terminal	External DC24V input
5	Expansion connector	Connects the module with an expansion module
6	Cold junction compensator	Executes reference junction compensation (RJC)

Analog Input Wiring

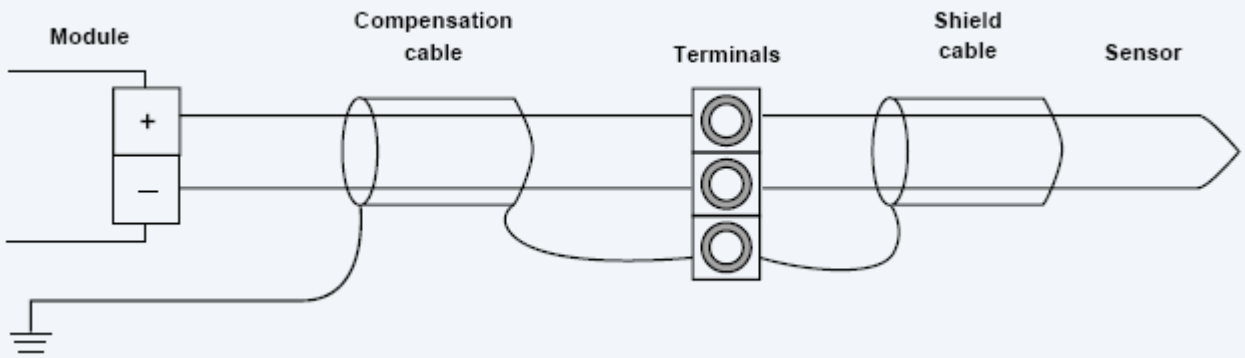

Accuracy and Resolution

TC type	Temperature input range	Displayed temperature range	Accuracy *Note1)		Resolution
			25℃	0 ~ 50℃ *Note2)	
K	-200.0℃ ~ 1300.0℃	-270.0℃ ~ -200.0℃	*Note3)		
		-200.0℃ ~ 0.0℃	±3.0℃	±7.5℃	0.2℃
		0.0℃ ~ 1300.0℃	±3.0℃	±7.5℃	0.1℃
		1300.0℃ ~ 1372.0℃	*Note3)		
J	-200.0℃ ~ 1200.0℃	-210.0℃ ~ -200.0℃	*Note3)		
		-200.0℃ ~ -100.0℃	±2.8℃	±7.0℃	0.2℃
		-100.0℃ ~ 1200.0℃	±2.8℃	±7.0℃	0.1℃
T	-200.0℃ ~ 400.0℃	-270.0℃ ~ -200.0℃	*Note3)		
		-200.0℃ ~ 400.0℃	±1.2℃	±3.0℃	0.1℃
R	0.0℃ ~ 1700.0℃	-50.0℃ ~ 0.0℃	*Note3)		
		0.0℃ ~ 1700.0℃	±3.5℃	±8.5℃	0.5℃
		1700.0℃ ~ 1768.0℃	*Note3)		

* Note 1) Total accuracy(25℃) = Accuracy(25℃) + RJC accuracy
= ±(Full scale X 0.2% + 1.0℃)
RJC accuracy = ±1.0℃
* Note 2) Temperature coefficient: ±100 ppm/℃
* Note 3) In the range, temperature can be measured, but accuracy and resolution are not guaranteed.

Specifications

Communication – Fast Ethernet

Features

- 10/100 Base-Tx Fast Ethernet for industrial use (IEEE802.3)
- Dedicated service for HMI connection (Modbus-TCP protocol)
- High speed link communication with high-level PLC(MasterLogic-200, MasterLogic-200IEC)
- Remote program, Remote monitoring with SoftMaster remote service
- Network security with Host table(limitation of unwanted connections)
- Convenient network system setting and various self-diagnosis / monitoring with SoftMaster-NM
    - Monitoring network information (Auto scan)
    - Checking module in network (PING)
    - Providing information of each service
      (High speed link, P2P, dedicated service, media condition)
- User protocol editing and P2P service (Communication with other brand's equipment)

Network with Ethernet

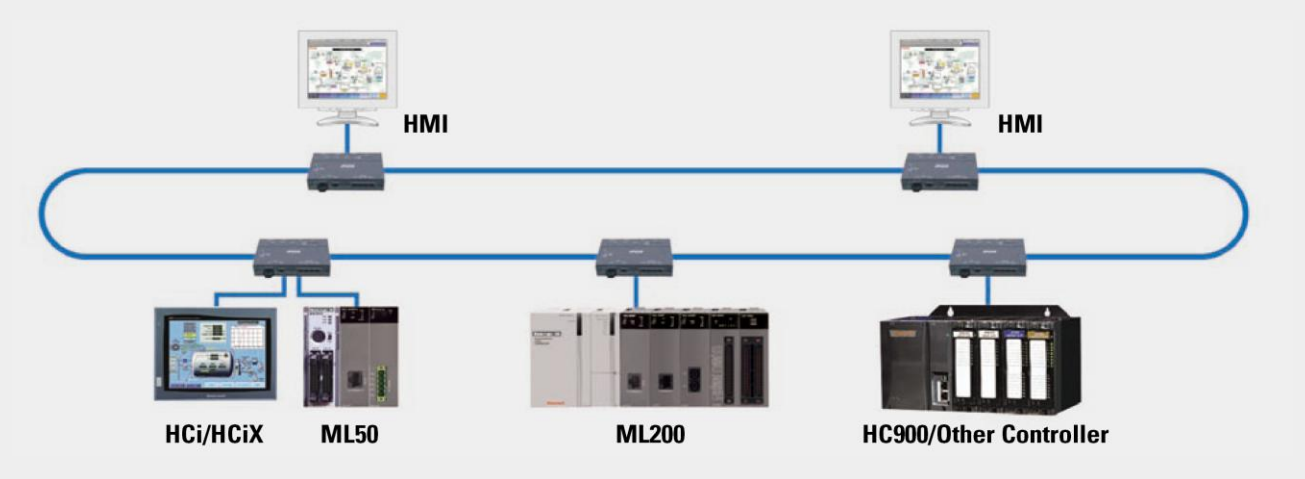

Performance

Model		MLL-EMTA
Communication Spec.		10/100 Base-TX
Protocol		TCP/IP, UDP/IP
Service	With ML PLCs	High-speed link, P2P service
	With Other Devices	P2P service
	Application	Dedicated protocol service, SoftMaster Service
HS Link Sending / Receiving		200 words / block(Max. 128 blocks)
No. of Channel Connectable to Upper Stage		4 channels
Service		Communication with PC (HMI) and external devices, high-speed communication among ML PLC's
Media		UTP/STP Category 5
Current Consumption(mA)		410

Communications – Snet

Features

- Max. 2 modules mountable for 1 main unit. Total 5 channels of communication in 1 MasterLogic-50 system(including Loader)
- Max. 32-unit connection through RS-485 communication.
- Protocol editing and parameter setting using SoftMaster-NM.
- Configurable communication speed setting (1,200 ~ 115,200 bps)
- Long distance communication system using dedicated modem (expansion RS-232C Communication module)
- Full duplex / Half Duplex communication (expansion RS485 Communication module)
- P2P : User-defined Communication and Modbus communication master
- Modbus RTU / ASCII drivers for HMI connection
- Various diagnosis function using SoftMaster-NM (I/O information, CPU, Link, Service, LOG)
- Simultaneous monitoring of sending / receiving frame and checking the result of frame
- Communication service information (Checking information of dedicated service, P2P service)

System Configuration

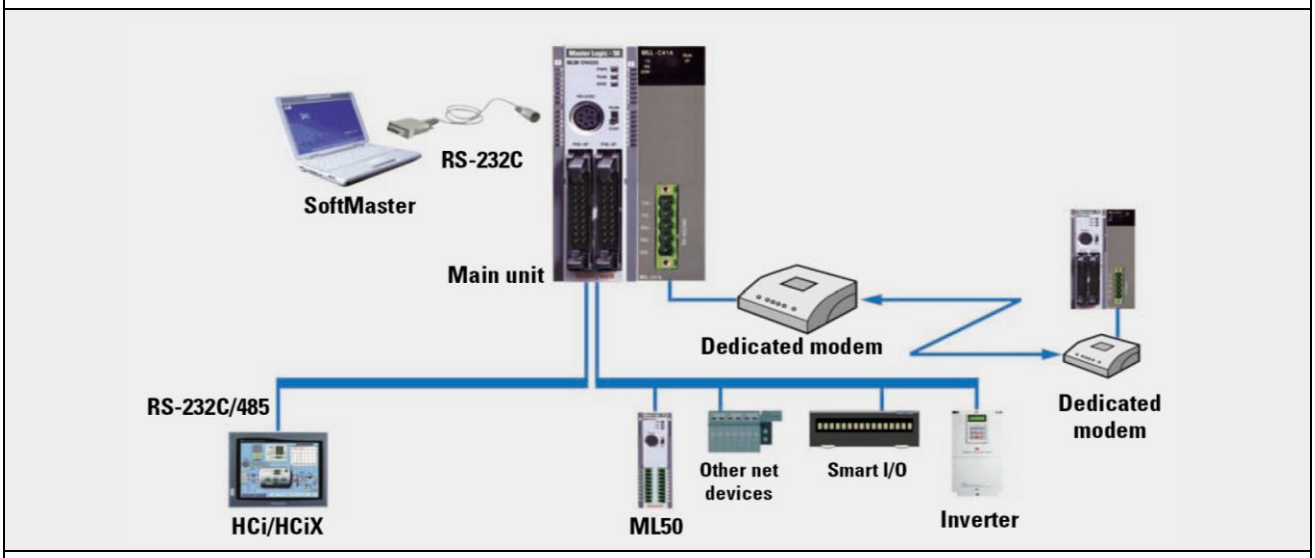

Performance

Model		Built-in RS-232C	MLL-C21A	Built-in RS485	MLL-C41A
Interface		RS-232C 1Ch	RS-232C 1Ch	RS-485 1Ch	RS-422/485 1 Ch
Modem Connection		Remote communication with external devices via modem connection, Available for only RS-232C port.			
Comm. Mode	Dedicated Mode	1:1 or 1:N communication using ML dedicated protocol			
	SoftMaster	Program upload / download and remote control			
	P2P Mode	Communication by protocol using SoftMaster-NM (Interface with other PLC's), HMI, Modbus RTU / ASCII master communication			
Operation Mode	Server(Slave)	Remote connection simultaneously using Modbus server, user-defined			
	Master	Modbus RTU / ASCII master, user defined			
Data Type	Start bit	1			
	Data bit	7 or 8			
	Stop bit	1 or 2			
	Parity	Even / Odd / None			
	Setting	Basic parameter setting with SoftMaster-NM			
Synchronization		Asynchronous			
Transmission Speed(bps)		Selectable 1200 / 2400 / 4800 / 9600 / 19200 / 38400 / 57600 / 115200 bps			

Station Number Setting	Up to 32 stations, from 0 to 31 with SoftMaster-NM			
Transmission Distance	Max.15meters (49.21 feet), extended using modem		Max.500meters (1640.42 feet)	
Modem Communication	Not available	Available	Not available	Not available
Network Configuration	1:1		1:N	
Diagnosis Function	Available through LED and SoftMaster-NM diagnosis service			
Max. Number of Installation	Built-in	2	Built-in	2

Software

Programming Software SoftMaster

- Programming editing & engineering software
- Windows based easy operation
- Multi-PLC, Multi-programming supports
- Various monitoring and diagnosis functions
- Windows 2000, XP (Limited use in Windows 98, ME version)

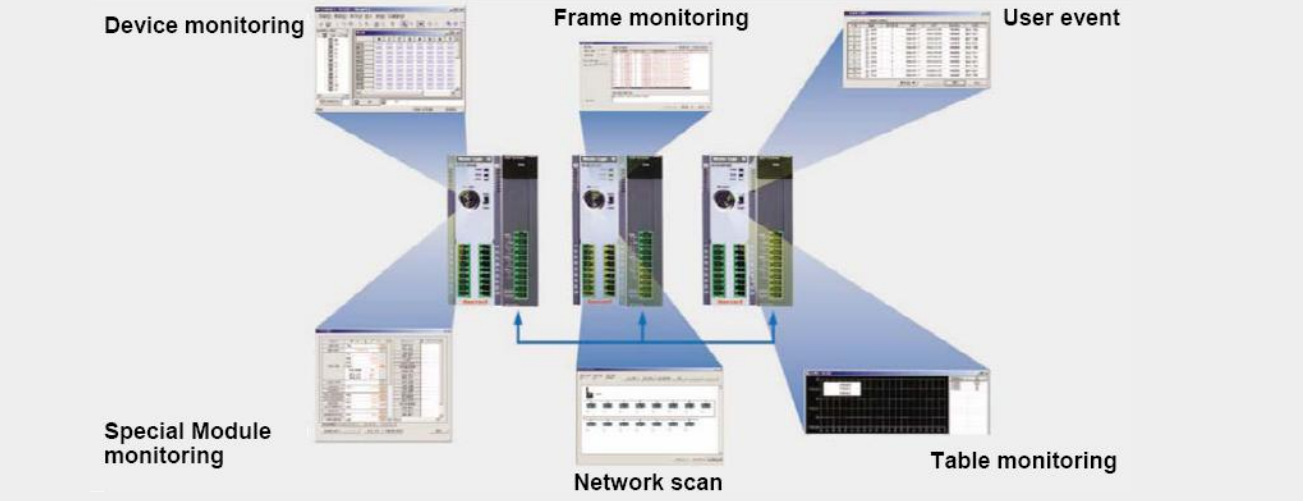

Network setting

- Convenient network setting
- Extended monitoring function for network system and communication modules
- Fast interface with CPU by effective network management
- Various built-in diagnosis functions
  (CPU condition, Link condition, Service condition, Auto scan, LOG, Frame monitoring)

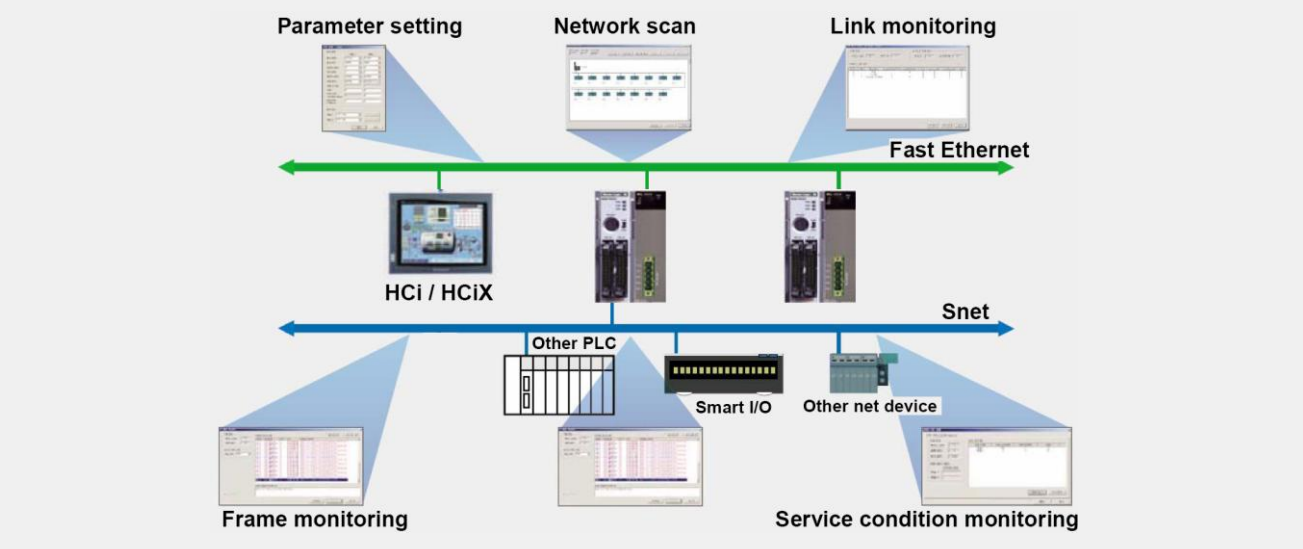

Honeywell

Programming Environment

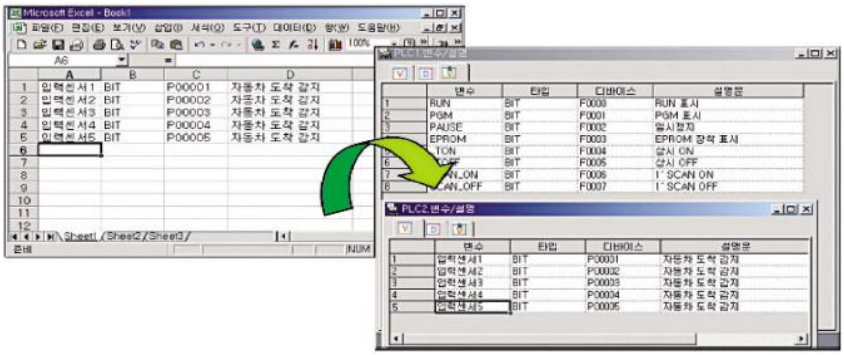

- Cell type input window
- Cell-unit editing
- Auto filling
- Compatibility with Microsoft EXCEL
- Redo & Undo
- Screen split editing
- Drag & Drop – Supports Drag & Drop for project, Variable / Statement, Ladder editing, Variable monitoring
- User defined shortcut key – Enhances user convenience with user-defined shortcut key
- Remote connection with RS-485 communication & Ethernet
- Remote connection with Max. 32 main units using built-in RS485 Communication

Remote connection using RS-485 Communication

Remote connection using Ethernet

Monitoring

User Defined Events

By registering user-defined events, users can read the record of specified event and user it for PLC operation and debugging.

Trend Monitoring

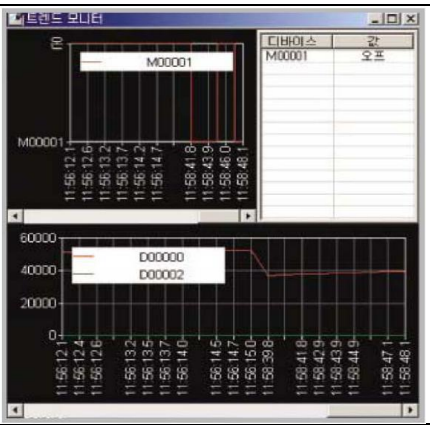

The progressive / changing value can be monitored and saved as a file.

Device Monitoring

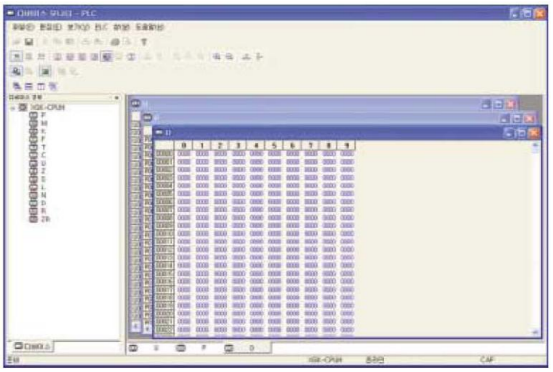

Variable Monitoring

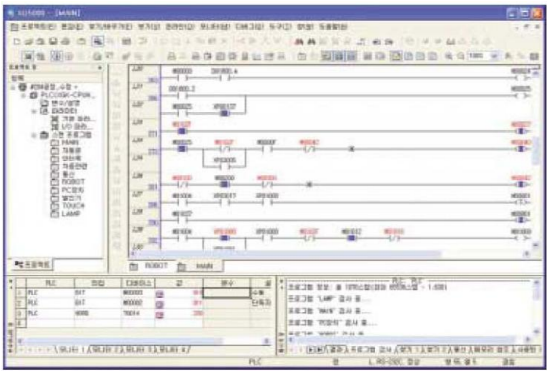

System Requirement	
O/S	Windows 2000, XP (Limited use in Windows 98, ME)
CPU	IBM Compatible PC with Min. 200 MHz Pentium Processor
Memory	Min. 128 Mbytes RAM
HDD	100 MB(Free Memory space)
Serial Port	Communication port for program transmission (RS-232C)
Printer	Compatible with Windows 98 or later
Mouse	Compatible with Windows 98 or later

Product List / Dimension

Product List

Item	Model	Specification	Remark
Base Module	MLM-DR16S	DC24V power supply, DC24V input 8 points, Relay output 8 points	
	MLM-DN16S	DC24V power supply, DC24V input 8 points, open collector output 8 points, built-in positioning function	
	MLM-DN32S	DC24V power supply, DC24V input 16 points, open collector output 16 points, built-in positioning function	
	MLC-DR32H	AC110~220V power supply, DC24V input 16 points, Relay output 16 points, RTC function	SoftMaster V2.2 or more
	MLC-DN32H	AC110~220V power supply, DC24V input 16 points, open collector output 16 points, built-in positioning function, RTC function	
	MLC-DR64H	AC110~220V power supply, DC24V input 32 points, Relay output 32 points, RTC function	
	MLC-DN64H	AC110~220V power supply, DC24V input 32 points, open collector output 32 points, built-in positioning function, RTC function	
Expansion I/O Module	MLE-DC08A	DC24V input 8 points	
	MLE-DC16A	DC24V input 16 points	
	MLE-DC32A	DC24V input 32 points	
	MLE-RY08A	Relay output 8 points	
	MLE-RY16A	Relay output 16 points	
	MLE-TN08A	Open collector output 8 points(NPN output)	
	MLE-TN16A	Open collector output 16 points(NPN output)	
	MLE-TN32A	Open collector output 32 points(NPN output)	
	MLE-DR16A	DC24V input 8 points, Relay output 8 points	
Expansion Special Module	MLF-AD04A	Current / Voltage input 4 channel	
	MLF-DC04A	Current output 4 channel	
	MLF-DV04A	Voltage output 4 channel	
	MLF-RD04A	RTD input 4 channel	
	MLF-TC04S	Thermocouple input 4 channel	

Expansion Comm. Module	MLL-C21A	Snet (RS-232C, Modem)	
	MLL-C41A	Snet (RS422/485)	
	MLL-EMTA	Ethernet interface	
Software	SoftMaster	Engineering software	
Loader Cable	PMC-310S	Connection Cable (PC to PLC), 9 pin (PC) – 6 pin (PLC), soft tube type cable.	Soft tube type
	USB-301A	Connection Cable (PC to PLC), USB1.1 for MLC only.	

* 64-point I/O and Open Collector (PNP) output modules are under development.(MLE-DC64A, TN64A, TP8A, TP16A, TP32A, TP64A)

Loader Cable Connection

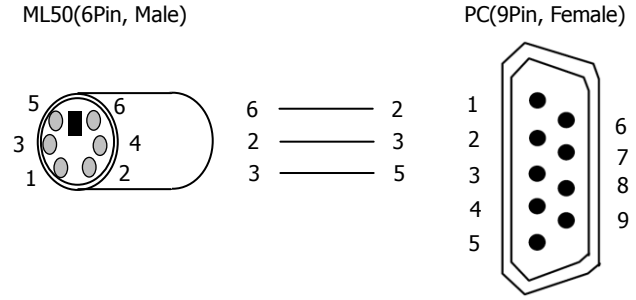

Dimension

Model : MLM-DN16/32S, MLM-DR16S Unit : mm

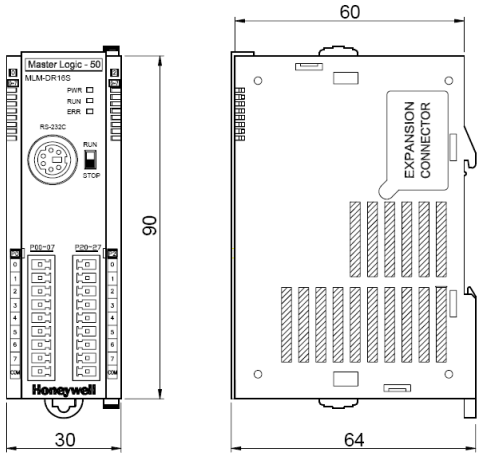

Model : MLC-DR32H, MLC-DN32H, MLC-DR32H/DC, MLC-DN32H/DC Unit : mm

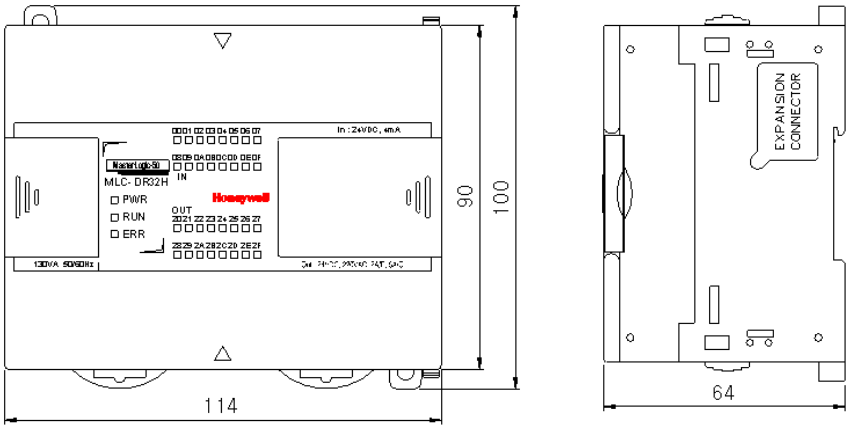

Model : MLC-DR64H, MLC-DN64H, MLC-DR64H/DC, MLC-DN64H/DC

Unit : mm

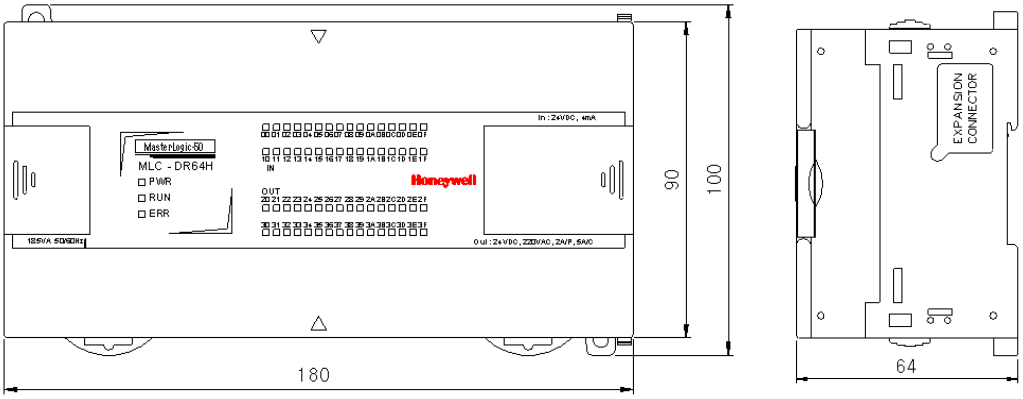

Model : MLE-DCXXA, MLE-TNXXA, MLF-AD04A, MLF-DX04A

Unit : mm

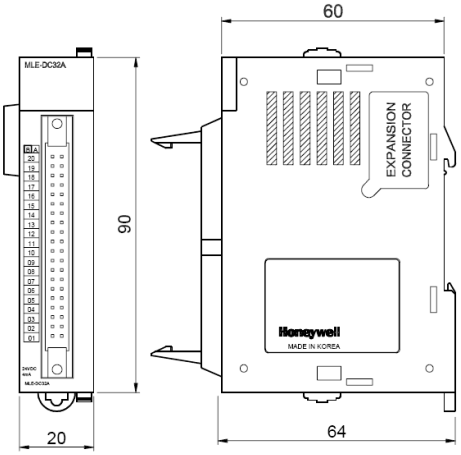

Model : MLE-RY16A, MLL-EMTA

Unit : mm

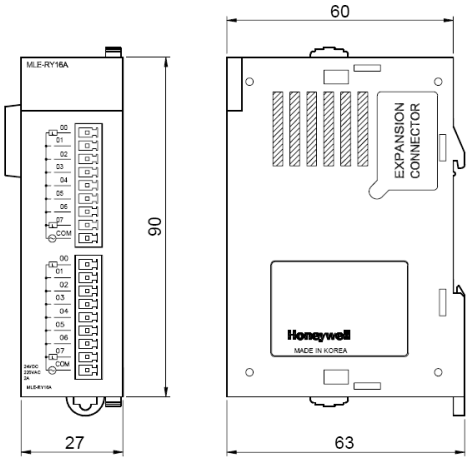

Model Interpretation

MasterLogic 50 Logic Controller Assemblies

SPECIFICATIONS		MODEL NUMBER	AVAILABILITY
BASE MODULE (CPU + PWR SUPPLY + BASE I/O)			
DC24V PWR Supply, DC24V Input (8 ch) & Relay Output (8 ch)	(Note 1)	MLM-DR16S	•
DC24V PWR Supply, DC24V Input (8 ch) & Open Collector Output (8 ch)	(Note 1)	MLM-DN16S	•
DC24V PWR Supply, DC24V Input (16 ch) & Open Collector Output (16 ch)	(Note 1)	MLM-DN32S	•
AC110~220V PWR Supply, DC24V input (16 ch) & Open Collector Output (16 ch)	(Note 1)	MLC-DN32H	•
AC110~220V PWR Supply, DC24V input (32 ch) & Open Collector Output (32 ch)	(Note 1)	MLC-DN64H	•
AC110~220V PWR Supply, DC24V input (16 ch) & Relay Output (16 ch)	(Note 1)	MLC-DR32H	•
AC110~220V PWR Supply, DC24V input (32 ch) & Relay Output (32 ch)	(Note 1)	MLC-DR64H	•
DC24V PWR Supply, DC24V input (16 ch) & Open Collector Output (16 ch)	(Note 1)	MLC-DN32H/DC	•
DC24V PWR Supply, DC24V input (32 ch) & Open Collector Output (32 ch)	(Note 1)	MLC-DN64H/DC	•
DC24V PWR Supply, DC24V input (16 ch) & Relay Output (16 ch)	(Note 1)	MLC-DR32H/DC	•
DC24V PWR Supply, DC24V input (32 ch) & Relay Output (32 ch)	(Note 1)	MLC-DR64H/DC	•
DIGITAL INPUT EXPANSION			
DC24V Input (8 ch)		MLE-DC08A	•
DC24V Input (16 ch)		MLE-DC16A	•
DC24V Input (32 ch)		MLE-DC32A	•
DIGITAL OUTPUT EXPANSION			
Relay Output (8 ch)		MLE-RY08A	•
Relay Output (16 ch)		MLE-RY16A	•
Open Collector Output (8 ch)		MLE-TN08A	•
Open Collector Output (16 ch)		MLE-TN16A	•
Open Collector Output (32 ch)		MLE-TN32A	•
DIGITAL INPUT / OUTPUT EXPANSION			
DC24V Input (8 ch) & Relay Output (8 ch)		MLE-DR16A	•
ANALOG INPUT EXPANSION			
Current/Voltage Input (4 ch)		MLF-AD04A	•
RTD Input (4 ch)		MLF-RD04A	•
TC Input (4 ch)		MLF-TC04S	•
ANALOG OUTPUT EXPANSION			
Current Output (4 ch)		MLF-DC04A	•
Voltage Output (4 ch)		MLF-DV04A	•
COMMUNICATION EXPANSION			
RS-232C/Modem (MLDP)		MLL-C21A	•
RS-422/485 (MODBUS RTU/ASC II, MLDP)		MLL-C41A	•
Ethernet (TCP/IP, UDP/IP)		MLL-EMTA	•
MANUAL & ACCESSORY			
ML50 Product Manuals (Full Document Set - Hard Copy, English)	(Note 2)	MLM-00422	•
Loader Cable		PMC-310S	•
USB Cable	(Note 3)	USB-301A	•
Smart Link Terminal Board 40 pins		TG7-1H40S	•
Smart Link Cable Ass'y 20x2-40P, 0.5 Meter	(Note 4)	R40H/20HH-05S-XBM3	•
Smart Link Cable Ass'y 20x2-40P, 1.0 Meter	(Note 4)	R40H/20HH-10S-XBM3	•
Smart Link Cable Ass'y 40-40P, 1.5 Meter	(Note 5)	C40HH-15SB-XBI	•
Smart Link Cable Ass'y 40-40P, 3.0 Meter	(Note 5)	C40HH-30SB-XBI	•

Note 1: Documentation is not provided with this model. If required, order the item seperately.

Warranty / Remedy

Honeywell warrants goods of its manufacture as being free of defective materials and faulty workmanship. Contact your local sales office for warranty information. If warranted goods are returned to Honeywell during the period of coverage, Honeywell will repair or replace without charge those items it finds defective. The foregoing is Buyer's sole remedy and is **in lieu of all other warranties, expressed or implied, including those of merchantability and fitness for a particular purpose**. Specifications may change without notice. The information we supply is believed to be accurate and reliable as of this printing. However, we assume no responsibility for its use.

While we provide application assistance personally, through our literature and the Honeywell web site, it is up to the customer to determine the suitability of the product in the application.

Specifications are subject to change without notice.

Honeywell Process Solution
HFS Asia Pacific
Honeywell Building
17 Changi Business Park Central 1
Singapore 486073

Honeywell

www.honeywell.com/ps